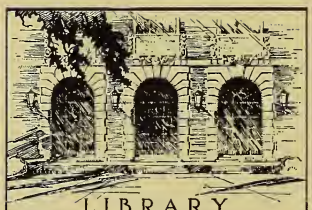

LIBRARY
OF THE
UNIVERSITY
OF ILLINOIS
621.365
Il655te
no. 31-36
cop. 2

ENGINEERING

The person charging this material is responsible for its return to the library from which it was withdrawn on or before the **Latest Date** stamped below.

Theft, mutilation, and underlining of books are reasons for disciplinary action and may result in dismissal from the University.

UNIVERSITY OF ILLINOIS LIBRARY AT URBANA-CHAMPAIGN

APR 18 1976

MAR 28 1976

L161—O-1096

ANTENNA LABORATORY

Technical Report No. 35

A THEORETICAL STUDY OF THE EQUIANGULAR SPIRAL ANTENNA

by

Plessa Edward Mast*

12 September 1958

Contract AF33(616)-3220
Project No. 6(7-4600) Task 40572

Sponsored by

WRIGHT AIR DEVELOPMENT CENTER

Electrical Engineering Research Laboratory
Engineering Experiment Station
University of Illinois
Urbana, Illinois

*Submitted in partial fulfillment of the requirements for the degree of Doctor of Philosophy in Electrical Engineering at the University of Illinois, 1958.

621.365
Il 655te
no. 35
Cop. 2

ACKNOWLEDGMENT

During the preparation of this work the author has had many interesting and helpful discussions with various staff members of the Antenna Laboratory at the University of Illinois. It is a pleasure to mention in particular Professor V. H. Rumsey who initially suggested and directed this project, Dr. E. C. Jordan who was advisor during its final stages, and Dr. P. E. Mayes who has given continued interest and guidance.

Digitized by the Internet Archive
in 2013

http://archive.org/details/theoreticalstudy35mast

ABSTRACT

In the past few years some entirely new broadband antennas have been developed. At the present time it is easy to construct practical antennas which have essentially the same pattern and impedance over a 10 to 1, or larger, frequency range. One group of broadband antennas utilizes the useful property of the equiangular (logarithmic) spiral curve that a scale change and a rotation are equivalent.

In this paper theoretical methods for determining the electric and magnetic fields produced by an equiangular spiral structure are considered. The equiangular spiral structure consists of two thin conducting strips (arms) with edges defined by equiangular spiral curves developed on a cone. The structure is considered infinite in extent with an arbitrary rate of spiral and an arbitrary cone angle. The planar equiangular spiral is included as a special case. To make the problem amenable to analysis it is necessary in some cases to restrict the gaps between the spiral arms to be small.

Expressions for the static (DC) electric fields are derived from separated solutions of Laplace's equation. The static electric fields are shown to be a function of only two variables. The separated solutions are a product of the circular functions, and associated Legendre functions of imaginary degree and real order. An infinite summation of the separated solutions is necessary to meet the required boundary conditions. For a small gap between the spiral arms the coefficients in the summation are expressed independently in a simple mathematical form. For an

arbitrary gap the coefficients can not be determined independently, and the solutions are approximated by a finite sum. The least squares criterion is used to obtain the best values of the coefficients, and the coefficients are expressed as the simultaneous solutions of a finite set of linear algebraic equations.

For the electromagnetic problem, separated solutions of the vector Helmholtz equation are obtained in an oblique spiral coordinate system. The separated solutions are similar to those of the spherical coordinate system. They are a product of Bessel functions of complex order, associated Legendre functions of complex degree and real order, and the circular functions. A double summation is required to satisfy the boundary conditions. Expressions for the coefficients in the summation are derived in terms of the tangential electric fields in the gap between the spiral arms.

For the special case of a balanced antenna with narrow gaps between the arms, expressions are derived for the fields produced in the gaps by a source at the origin. These solutions make available a means of calculating the input impedance, the current distribution, and the pattern of an equiangular spiral antenna.

CONTENTS

		Page
1.	Introduction	1
2.	The Equiangular Spiral Antenna	4
	2.1 The Equiangular Spiral	4
	2.2 The Equiangular Spiral Antenna	5
3.	The Static (DC) Electric Fields	9
	3.1 Laplace's Equation with Spiral Variables	9
	3.2 Separated Solutions for Laplace's Equation	10
	3.3 The Potential in Terms of Potential at $\Theta = \Theta_o$	14
	3.4 Potential on the Boundary for a Small Gap	15
	3.5 Potential on the Boundary for an Arbitrary Gap	16
	3.6 Expressions for the Electric Field Intensity	19
4.	The Electromagnetic Fields	21
	4.1 Introduction	21
	4.2 An Orthogonal Spiral Coordinate System	21
	4.3 An Oblique Spiral Coordinate System	22
	4.4 The Vector Helmholtz Equation with Spiral Variables	24
	4.5 Separated Solutions	24
	4.6 The Fields from Specified Conditions on the Boundary	30
	4.7 The Mixed Boundary Conditions	35
5.	The Balanced Antenna with Narrow Gaps	37
	5.1 The Electric Fields at $\Theta = \Theta_o$	37
	5.2 Expressions for $C^{(m}_{n+j\frac{m}{a}}$ and $C^{(m}_{n+j\frac{m}{a}}$	40
	5.3 The Continuity of Tangential $\underline{H}$ from Regions I and II	42
	5.4 The Far Fields and the Radiation Condition	45
	5.5 The Input Admittance	48
	5.6 The Problem of Numerical Calculation	49
6.	Conclusions	50
Bibliography		51
Appendix A		53
Appendix B		54

ILLUSTRATIONS

Figure Number		Page
1.	Spherical Coordinate System	4
2.	The Equiangular Spiral Antenna Developed in the Plane $\theta_o = \pi/2$	7
3.	The Equiangular Spiral Structure Developed on the Cone $\theta_o = 22.5^o$	8
4.	Boundary Conditions at $\theta = \theta_o$	13
5.	Electric and Magnetic Fields in a Narrow Gap	38
6.	The Summation Method	56

LIST OF SYMBOLS

		Page
β	Phase shift constant	21
γ_m	Defined on	18
Γ	Gamma function	12
ϵ	Dielectric constant of the medium	21
η	Intrinsic impedance of the medium	29
θ	Conventional spherical coordinate variable	4
θ_o	Antenna cone angle	4
$\underline{\hat{\theta}}$	Unit vector normal to a constant θ surface	23
μ	Permeability of the medium	21
ν	Separation constant (TE)	27, 34
$\bar{\nu}$	Separation constant (TM)	29, 33
π'_κ	Separated solution (TE)	26
Π'	Scaler function (TE)	26
Π''	Scalar function (TM)	29
τ	Spiral variable	10, 26
τ_n	Antenna parameter	11
ϕ	Conventional spherical coordinate variable	4
$\underline{\hat{\phi}}$	Unit vector normal to a constant ϕ surface	23
ψ	Potential function of (r, θ, ϕ)	8
*	Complex conjugate	
a	Antenna parameter - rate of spiral	4
A_m	Coefficient	11
A'_κ	Coefficient (TE)	26

LIST OF SYMBOLS (CONTINUED)

		Page
$A_{\nu}^{'m}$	Coefficient for $\theta < \theta_o$ (TE)	28
$A_{\nu}^{''m}$	Coefficient for $\theta < \theta_o$ (TM)	29
$\mathfrak{A}_{n,K}$	Gegenbauer's polynomial	32
b_p	Power series coefficient	40
B_m	Coefficient	14
$B_{\nu}^{'m}$	Coefficient for $\theta > \theta_o$ (TE)	29
$B_{\nu}^{''m}$	Coefficient for $\theta > \theta_o$ (TM)	29
C_m	Coefficient	15
$C_{n+j\frac{m}{a}}^{'m}$	Coefficient (TE)	33
$C_{n+j\frac{m}{a}}^{''m}$	Coefficient (TM)	32
e	Naperian base	
$\bar{\underline{E}}$	Electric field vector of (r, θ, ϕ, t)	21
$\underline{E}$	Electric field vector of (r, θ, ϕ)	21
f	Electric field in the gap (r comp.)	31
F	Scalar function	39
$\mathcal{F}$	Hypergeometric function	12
g	Electric field in the gap (ϕ comp.)	31
$\bar{\underline{H}}$	Magnetic field vector of (r, θ, ϕ, t)	21
$\underline{H}$	Magnetic field vector of (r, θ, ϕ)	21
j	$=\sqrt{-1}$	
$J_{\nu+\frac{1}{2}}$	Bessel function of the first kind	28
L_k	Defined on	19
$M_n^{'}$, $M_n^{''}$	Defined on	44

LIST OF SYMBOLS (CONTINUED)

		Page
$\bar{M}_n'$, $\bar{M}_n''$	Defined on	47
N_n', N_n''	Defined on	44
$\bar{N}_n'$, $\bar{N}_n''$	Defined on	47
$\hat{\underline{p}}$	Unit vector	22
$P_\nu^m(\cos\theta)$	Associated Legendre function of the first kind	12, 27
$Q_\nu^m(\cos\theta)$	Associated Legendre function of the second kind	12, 27
$\mathcal{P}^m_{n+j\frac{m}{a}}(\cos\theta)$	Defined on	44
$\mathcal{Q}^m_{n+j\frac{m}{a}}(\cos\theta)$	Defined on	44
r	Conventional spherical coordinate variable	4
$\bar{r}$	Spiral variable	8
$\hat{\underline{r}}$	Unit vector normal to a constant r surface	23
s	Spiral variable	8, 23
$\hat{\underline{s}}$	Unit vector normal to a constant s surface	23
s_n	Antenna parameter	4
u	$= \beta r$	23
V	Potential function of (θ, τ)	10
V	Gap voltage	40
$\bar{V}$	Potential function of $(\bar{r}, \theta, s)$	10
V_m	Separated solution	11
V_o	Potential of spiral arm	8

Subscript I identifies the quantity with the region $\theta < \theta_o$

Subscript II identifies the quantity with the region $\theta > \theta_o$

Prime identifies a TE component

Double prime identifies a TM component

1. INTRODUCTION

Recent years have seen the development and use of a number of broadband antennas. Experimental techniques have been used to provide entirely new types of antenna structures which maintain essentially the same pattern and impedance characteristics over a 10 to 1, or larger, frequency range. One basis for the design of broadband antennas has been the "angle method" [1] whereby the boundaries of the antenna are specified primarily in terms of angles, and thus lengths are avoided which are resonant at one frequency and not at others. The biconical antenna, the disc-cone, the fin, and the equiangular spiral are all examples of practical antenna structures which are specified primarily in terms of angles.

While the angle concept specifies in general what boundaries can be used to construct an antenna which might be broadband, it does not predict what the actual pattern or impedance will be. To date almost all of the development of broadband antennas has been of an experimental nature with only a minimum amount of theoretical development. Schelkunoff[2] has derived theoretical expressions for the pattern and impedance of the infinite biconical structure by showing that the TEM mode is excited by a source at the origin. Carrel[3] has devised methods for analyzing theoretically an infinite biconical structure of arbitrary cross section showing that the infinite structure has characteristics which are independent of frequency. However, the finite over-all size required in a practical antenna gives rise to an "end effect" which seriously

limits the bandwidth obtainable with the biconical antennas of arbitrary cross section.

Using the "angle method", Rumsey in 1954 proposed a class of antennas based on the equiangular spiral. The balanced planar equiangular spiral has been very thoroughly investigated experimentally by Dyson[4] who has shown that it is easy to construct a practical antenna having frequency independent characteristics over a 20 to 1 bandwidth. He has also shown that over a range of frequencies the input impedance and the pattern of this antenna are not affected by increasing the length of the antenna arms. Thus, the equiangular spiral structure does not have an appreciable "end effect," and after a critical size is passed the characteristics of the finite antenna are the same as for the infinite structure.

Experimentally, the balanced planar version of the equiangular spiral antenna radiates a circularly polarized, bidirectional pattern, with the two lobes of the pattern perpendicular to the plane of the antenna. Theoretically, the pattern rotates about a line perpendicular to the plane of the antenna as the frequency is changed. However, in the useful frequency range the pattern is nearly symmetrical about the axis of rotation, and, therefore this rotation has a small effect on the experimental patterns of the antenna. Recently, Dyson[5] has shown that the balanced equiangular spiral developed on a cone can be made into a practical broadband antenna with a unidirectional pattern.

This paper presents the results of a theoretical study of the electric and magnetic fields produced by an equiangular spiral structure.

As the boundaries of the equiangular spiral antenna can be specified in reasonably simple mathematical terms, it was felt worthwhile to investigate methods of obtaining exact theoretical expressions for the fields. To obtain a feeling for the problem, the static (DC) electric fields were determined first by obtaining separated solutions of Laplace's equation. The static solutions pointed the way to a set of coordinate variables which were used to obtain the electromagnetic fields as solutions of the vector Helmholtz equation. While it was desired to determine mathematical expressions for the fields under the most general conditions, several simplifying assumptions were necessary. In all cases the spiral structure is considered infinite in extent, and the spirals are assumed to continue indefinitely close to the origin. Also, in some places in the analysis the gap between the spiral arms is assumed arbitrarily small.

2. THE EQUIANGULAR SPIRAL ANTENNA

2.1 The Equiangular Spiral

A general equiangular (or logarithmic) spiral curve can be defined as the intersection of the two surfaces.

$$r = s_o e^{a\phi} \tag{2-1}$$

and

$$\theta = \theta_o$$

where s_o, a, and θ_o are real parameters, and r, θ, and ϕ are the conventional spherical coordinates shown in Fig. 1.

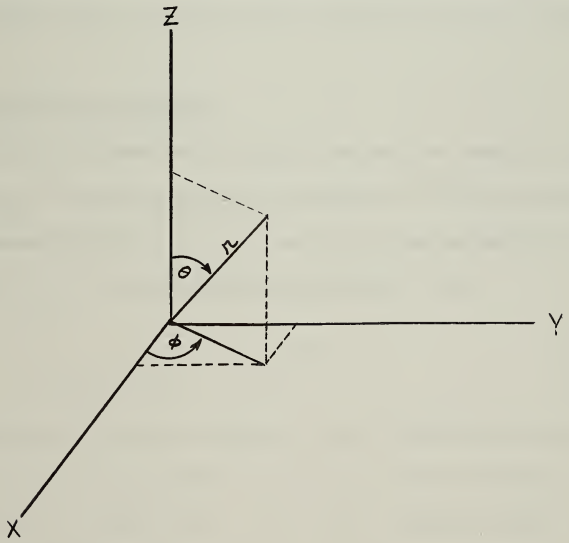

FIGURE 1 SPHERICAL COORDINATE SYSTEM

The equiangular spiral curve has the useful property that a change in scale is equivalent to a rotation. If the scale of the coordinate system is changed by a factor c such that

$$r' = cr \tag{2-2}$$

the defining equations for the spiral can be written as

$$r' = c\, s_o\, e^{a\phi} = s_o\, e^{a(\phi+\phi_o)} \tag{2-3}$$

$$\theta = \theta_o$$

where

$$\phi_o = (\ell n\ c)/a\ . \tag{2-4}$$

Thus a change in scale by the factor c produces the same spiral as would be obtained by rotating the original curve by an angle $(\ell n\ c)/a$ about the polar axis.

2.2 The Equiangular Spiral Antenna

Equiangular spiral curves can be used to define the boundaries of an antenna by using four curves having the same values for the parameters a and θ_o, but different values s_1, s_2, s_3, and s_4 for the parameters s_o. The parameters s_1, s_2, s_3, and s_4 must be chosen such that

$$s_1 < s_2 < s_3 < s_4 < s_1\, e^{2\pi a}\ . \tag{2-5}$$

One arm of the antenna is formed by placing a thin conducting strip on the cone $\theta = \theta_o$ such that the edges of the strip coincide with the spirals corresponding to $s_o = s_1$ and $s_o = s_2$. In a similar manner another strip with edges coinciding with the spirals $s_o = s_3$ and $s_o = s_4$ forms a second arm. Near the origin the two arms of the antenna come arbitrarily close together, and the origin is a convenient place to excite the antenna.

Examples of equiangular spiral antennas are shown in Figs. 2 and 3.

The infinite equiangular spiral antenna defined above has the useful property that a scale change is equivalent to a rotation. This assures that the space variations of the fields produced by different excitation frequencies can be related simply by rotating the reference axis of the coordinate system. Therefore, the pattern of the infinite equiangular spiral antenna rotates as the excitation frequency is changed, and the input impedance is independent of frequency.

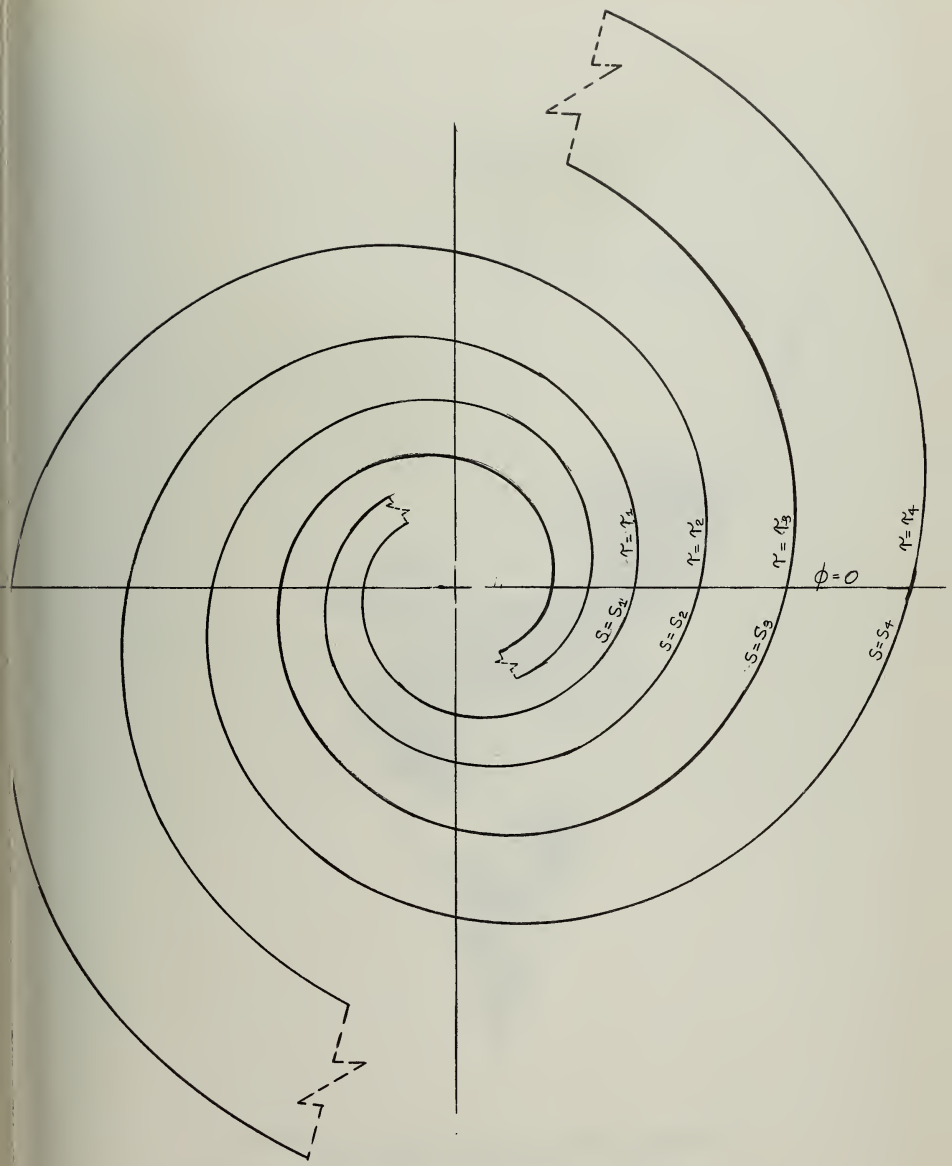

FIGURE 2 THE EQUIANGULAR SPIRAL STRUCTURE DEVELOPED IN THE PLANE $\Theta_o = \pi/2$

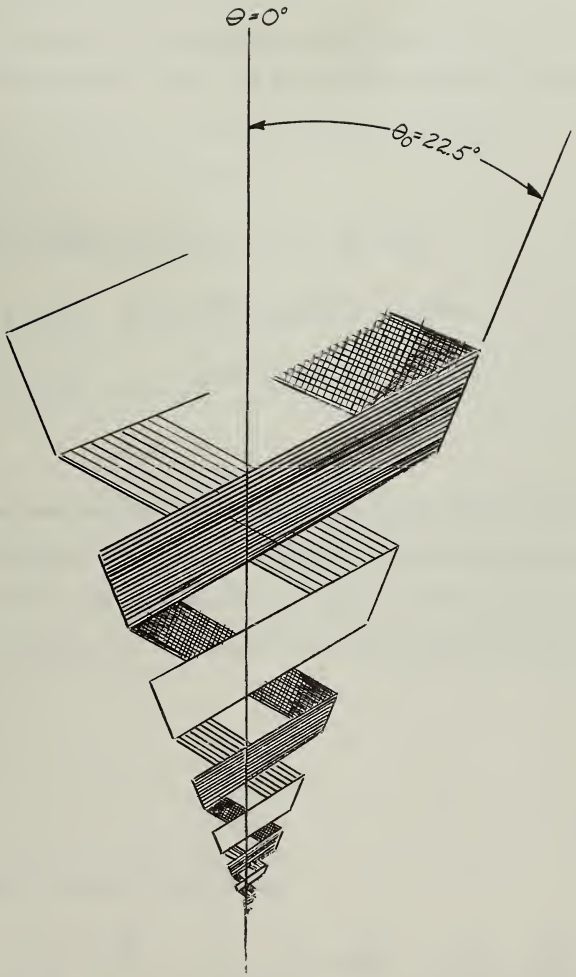

FIGURE 3. THE EQUIANGULAR SPIRAL STRUCTURE DEVELOPED ON THE CONE $\theta_o = 22.5^o$.

3. THE STATIC (DC) ELECTRIC FIELDS

3.1 Laplace's Equation with Spiral Variables

With one of the arms of an equiangular spiral structure at the potential $+V_o$ and the other at $-V_o$, the potential $\psi(r,\theta,\phi)$ at any point in space is given by the finite solution of Laplace's equation.

$$\nabla^2 \psi = 0 \tag{3-1}$$

which satisfies the boundary conditions at $\theta = \theta_o$ that

$$\psi = +V_o \quad \text{for } s_1 e^{2\pi ka} < re^{-a\phi} < s_2 e^{2\pi ka}$$

$$\psi = -V_o \quad \text{for } s_3 e^{2\pi ka} < re^{-a\phi} < s_4 e^{2\pi ka}$$

$$k = 0, \pm 1, \pm 2, \ldots \tag{3-2}$$

The potential ψ and the boundary conditions are functions of all three of the coordinate variables, but the boundary conditions are expressed in terms of θ and $re^{-a\phi}$. This suggests the introduction of a new set of variables, one of which is $re^{-a\phi}$. A set of variables which has been found convenient is

$$\begin{aligned} \bar{r} &= r \\ s &= re^{-a\phi} \\ \theta &= \theta \quad . \end{aligned} \tag{3-3}$$

Laplace's equation in spherical coordinates[6]

$$\nabla^2 \psi = \frac{1}{r^2} \frac{\partial}{\partial r} \left(r^2 \frac{\partial \psi}{\partial r}\right) + \frac{1}{r^2 \sin \theta} \frac{\partial}{\partial \theta} \left(\sin \theta \frac{\partial \psi}{\partial \theta}\right) + \frac{1}{r^2 \sin^2 \theta} \frac{\partial^2 \psi}{\partial \phi^2} = 0 \tag{3-4}$$

provides a convenient starting point, and in terms of $\bar{r}$, θ, and s Eq. 3-4 becomes

$$\nabla^2\bar{V} = \frac{1}{\bar{r}^2}\frac{\partial}{\partial\bar{r}}\left(\bar{r}^2\frac{\partial\bar{V}}{\partial\bar{r}}\right) + \frac{2s}{\bar{r}}\frac{\partial^2\bar{V}}{\partial s\partial\bar{r}} + \frac{1}{\bar{r}^2}\frac{\partial}{\partial s}\left(s^2\frac{\partial\bar{V}}{\partial s}\right) + \frac{a^2 s}{\bar{r}^2\sin^2\theta}\frac{\partial}{\partial s}\left(s\frac{\partial\bar{V}}{\partial s}\right)$$

$$+ \frac{1}{\bar{r}^2\sin\theta}\frac{\partial}{\partial\theta}\left(\sin\theta\frac{\partial\bar{V}}{\partial\theta}\right) = 0 \qquad (3\text{-}5)$$

with $\psi(r, \theta, \phi) = \bar{V}(\bar{r},\theta,s)$.

The boundary conditions on $\bar{V}$ are independent of $\bar{r}$. If Eq. 3-5 is independent of $\bar{r}$ when $\partial\bar{V}/\partial\bar{r}$ is assumed zero, the $\bar{V}$ which satisfies the boundary conditions is independent of $\bar{r}$. Assuming $\partial\bar{V}/\partial\bar{r} = 0$ in Eq. 3-5 gives

$$\frac{\partial}{\partial s}\left(s^2\frac{\partial\bar{V}}{\partial s}\right) + \frac{a^2 s}{\sin^2\theta}\frac{\partial}{\partial s}\left(s\frac{\partial\bar{V}}{\partial s}\right) + \frac{1}{\sin\theta}\frac{\partial}{\partial\theta}\left(\sin\theta\frac{\partial\bar{V}}{\partial\theta}\right) = 0. \qquad (3\text{-}6)$$

which is independent of $\bar{r}$, and the assumption is justified. Therefore, the original three dimensional problem in spherical coordinates is reduced to a two dimensional problem, and the static potential can be expressed in terms of only two variables s and θ.

3.2 Separated Solutions for Laplace's Equation

A further simplification in the two dimensional Laplace's equation and the boundary conditions is obtained by use of the substitutions

$$\tau = \ell n\, s, \quad V(\theta, \tau) = \bar{V}(\bar{r}, \theta, s)$$

which reduces Eq. 3-6 to

$$\left(1 + \frac{a^2}{\sin^2\theta}\right)\frac{\partial^2 V}{\partial\tau^2} + \frac{\partial V}{\partial\tau} + \frac{1}{\sin\theta}\frac{\partial}{\partial\theta}\left(\sin\theta\frac{\partial V}{\partial\theta}\right) = 0 \quad . \qquad (3\text{-}7)$$

Letting $\tau_n = \ell n\, s_n$, the boundary conditions in terms of θ and τ are

$$V = +V_o \quad \text{for } \tau_1 + 2\pi ak < \tau < \tau_2 + 2\pi ak$$

$$V = -V_o \quad \text{for } \tau_3 + 2\pi ak < \tau < \tau_4 + 2\pi ak$$

$$k = 0, \pm 1, \pm 2, \pm 3, \ldots . \tag{3-8}$$

which are periodic in τ with period $2\pi a$. Separated solutions of Eq. 3-7 can be obtained by assuming a solution of the form

$$V_m = A_m \Theta\, e^{j\frac{m}{a}\tau} \tag{3-9}$$

where

A_m is a complex constant dependent only on m,

$\Theta \equiv \Theta(\theta)$ is independent of τ,

and

m is required to be an integer to have solutions with a periodicity in τ agreeing with the boundary conditions. The use of a sum of complex functions to represent a real potential is convenient as separated solutions of the form $\Theta(\theta)\cos\frac{m}{a}\tau$ or $\Theta(\theta)\sin\frac{m}{a}\tau$, individually, will not satisfy Eq. 3-7. It is shown in Appendix A that, if the potential is assumed real at $\theta = \theta_o$, the solutions presently obtained give real values for the potential for all θ and τ. It is found that V_m will satisfy Eq. 3-7 if Θ satisfies

$$\frac{d^2\Theta}{d\theta^2} + \operatorname{ctn}\theta\frac{d\Theta}{d\theta} + \left[\left(j\frac{m}{a}\right)\left(1 + j\frac{m}{a}\right) - \frac{m^2}{\sin^2\theta}\right]\Theta = 0 \,. \tag{3-10}$$

Eq. 3-10 is a form of the associated Legendre equation of degree $j\frac{m}{a}$ and

order m. Many of the references on the associated Legendre equation consider only the special case of integral order and degree. References which consider the general case of complex degree and order are Hobson,[7] Snow,[8] and Schelkunoff.[9] The notation used in the following is the same as used by Hobson.

The two linearly independent solutions of Eq. 3-10 are the associated Legendre functions of the first kind $P^m_{j\frac{m}{a}}(\cos\theta)$ and the second kind $Q^m_{j\frac{m}{a}}(\cos\theta)$. For integral m and real θ, $P^m_{j\frac{m}{a}}(\cos\theta)$ is finite for all θ except $\theta = \pi$, and $Q^m_{j\frac{m}{a}}(\cos\theta)$ is finite for all θ except $\theta = 0$ or π. As $Q^m_{j\frac{m}{a}}(\cos\theta)$ becomes infinite at both $\theta = 0$ and π, it is not useful in the representation of the desired potential function and need not be considered further. For θ real and m a positive integer, $P^m_{j\frac{m}{a}}(\cos\theta)$ is given by

$$P^m_{j\frac{m}{a}}(\cos\theta) = \frac{(-)^m}{2m} \times \frac{\Gamma(m+1+j\frac{m}{a})}{\Gamma(-m+1+j\frac{m}{a})} \times \frac{\sin^m\theta}{(m)!} F(m-j\tfrac{m}{a};\ m+1+j\tfrac{m}{a};\ m+1;\ \sin^2\tfrac{\theta}{2}) \quad (3\text{-}11)$$

and for m a negative integer by

$$P^m_{j\frac{m}{a}}(\cos\theta) = \frac{\sin^{-m}\theta}{2^{-m}(-m)!} F(-m-j\tfrac{m}{a},\ -m+1+j\tfrac{m}{a};\ -m+1;\ \sin^2\tfrac{\theta}{2}) \quad (3\text{-}12)$$

where F is the hypergeometric function

$$F(\alpha,\ \beta;\ \gamma;\ z) = 1 + \frac{\alpha\cdot\beta}{1\cdot\gamma} z + \frac{\alpha(\alpha+1)\ \beta(\beta+1)}{1\cdot 2\cdot\gamma\ (\gamma+1)} z^2 + \ldots\ldots \quad (3\text{-}13)$$

and Γ represents the gamma function.[10]

The fact that there are no solutions of Eq. 3-10 which are finite

for all real values of θ makes it necessary to divide the space about the spiral structure into two regions with a different mathematical representation for the fields in each of the regions. The logical boundary to use is the cone $\theta = \theta_o$ as shown in Fig. 4.

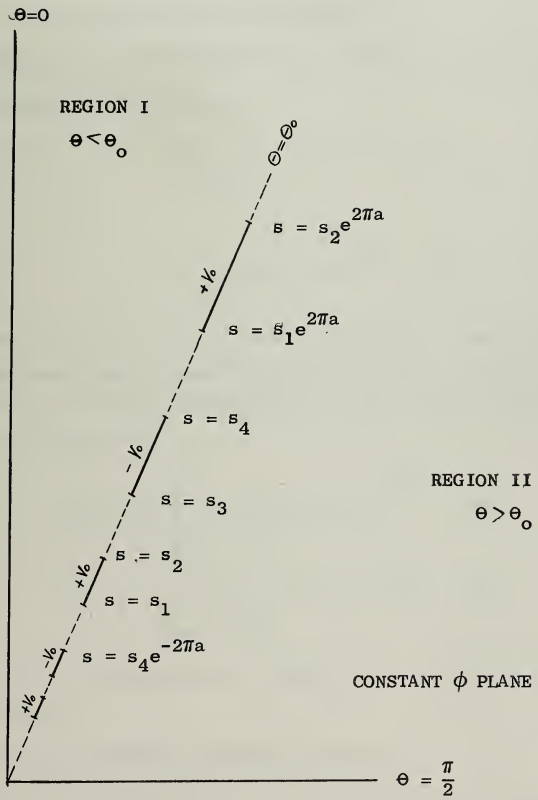

FIGURE 4 BOUNDARY CONDITIONS AT $\theta = \theta_o$.

In region I for $\theta < \theta_o$, $P^m_{j\frac{m}{a}}(\cos\theta)$ can be used in representing the potential, and in region II for $\theta > \theta_o$, $P^m_{j\frac{m}{a}}(-\cos\theta)$ is appropriate.

On the boundary surface $\theta = \theta_o$ the potential from both regions must be $+V_o$ or $-V_o$ on the arms of the spiral; also, the expressions for the potential from the two regions and their normal derivatives must match along the gap between the arms. The forced separation of the potential expressions into two regions greatly complicates the problem as it becomes a boundary value problem with mixed boundary conditions.

The appropriate separated solutions of the two dimensional Laplace's equation with spiral variables are

$$V_m = A_m P^m_{j\frac{m}{a}}(\cos\theta)\, e^{j\frac{m}{a}\tau} \qquad \theta \leq \theta_o$$

and (3-14)

$$V_m = B_m P^m_{j\frac{m}{a}}(-\cos\theta)\, e^{j\frac{m}{a}\tau} \qquad \theta \geq \theta_o .$$

A single value of m in Eqs. 3-14 is not sufficient to meet the required boundary conditions, but a summation of terms of this form over all integer values of m will be found adequate. The expressions for the potential at any point are

$$V(\theta,\tau) = \sum_{m=-\infty}^{\infty} A_m P^m_{j\frac{m}{a}}(\cos\theta)\, e^{j\frac{m}{a}\tau} \qquad \theta \leq \theta_o$$

and (3-15)

$$V(\theta,\tau) = \sum_{m=-\infty}^{\infty} B_m P^m_{j\frac{m}{a}}(-\cos\theta)\, e^{j\frac{m}{a}\tau} \qquad \theta \geq \theta_o .$$

Expressions for the coefficients A_m and B_m will be derived in the succeeding sections.

3.3 The Potential in Terms of Potential at $\theta = \theta_o$

The coefficients A_m and B_m will be determined first in terms of the potential distribution $V(\theta_o,\tau)$ existing on the boundary $\theta = \theta_o$. The potential on the boundary is a continuous periodic function of τ,

and may be expanded in a Fourier series as

$$V(\theta_o,\tau) = \sum_{m=-\infty}^{\infty} C_m \, e^{j\frac{m}{a}\tau} \tag{3-16}$$

with the coefficients C_m given by

$$C_m = \frac{1}{2\pi a} \int_{\tau_1}^{\tau_1+2\pi a} V(\theta_o,\tau) \, e^{-j\frac{m}{a}\tau} \, d\tau \tag{3-17}$$

From Eqs. 3-15 and 3-16 the relations between A_m, B_m, and C_m are

$$A_m = \frac{C_m}{P^{j\frac{m}{a}}_m (\cos \theta_o)}$$

and (3-18)

$$B_m = \frac{C_m}{P^{j\frac{m}{a}}_m (-\cos \theta_o)} .$$

Eqs. 3-17 and 3-18 express the coefficients A_m and B_m in terms of an arbitrary distribution of potential in the gap with respect to τ, and they assure that the potentials from regions I and II match at the gap. The potential distribution in the gap is not arbitrary, but is restricted by the requirement that the normal derivatives of the potential match at the gap.

3.4 Potential on the Boundary for a Small Gap

As the gaps between the spiral arms are made small

$$\tau_2 \longrightarrow \tau_3 \quad \text{and} \quad \tau_4 \longrightarrow \tau_1 + 2\pi a \quad . \tag{3-19}$$

For arbitrarily small gaps the potential is specified over the entire cone $\theta = \theta_o$ as

$$V = +V_o \qquad \tau_1 + 2\pi ak < \tau < \tau_2 + 2\pi ak = \tau_3 + 2\pi ak$$

$$V = -V_o \qquad \tau_3 + 2\pi ak < \tau < \tau_4 + 2\pi ak = \tau_1 + 2\pi a(k+1)$$

$$k = 0, \pm 1, \pm 2, \ldots \tag{3-20}$$

C_m is given by

$$C_m = \frac{1}{2\pi a}\left[\int_{\tau_1}^{\tau_2} V_o\, e^{-j\frac{m}{a}\tau}\, d\tau - \int_{\tau_2}^{\tau_1+2\pi a} V_o\, e^{-j\frac{m}{a}\tau}\, d\tau\right] \tag{3-21}$$

and

$$C_o = V_o\left[\frac{\tau_2 - \tau_1}{\pi a} - 1\right]$$

$$C_m = \frac{jV_o}{\pi m}\left[e^{-j\frac{m}{a}\tau_2} - e^{-j\frac{m}{a}\tau_1}\right] \qquad m \neq 0 \tag{3-22}$$

Substitution of C_m from Eq. 3-22 into Eqs. 3-18 and 3-22 gives an explicit expression for the potential at any point in terms of the parameters a, τ_1, τ_2, and θ_o as

$$\frac{V}{V_o} = \left[\frac{\tau_2 - \tau_1}{\pi a} - 1\right] + \frac{1}{\pi}\sum_{\substack{m=-\infty \\ m\neq 0}}^{\infty} \frac{j}{m}\left[e^{-j\frac{m}{a}\tau_2} - e^{-j\frac{m}{a}\tau_1}\right] \frac{P_{j\frac{m}{a}}^{m}(\cos\theta)}{P_{j\frac{m}{a}}^{m}(\cos\theta_o)}\, e^{j\frac{m}{a}\tau} \qquad \theta \leq \theta_o$$

$$\frac{V}{V_o} = \left[\frac{\tau_2 - \tau_1}{\pi a} - 1\right] + \frac{1}{\pi}\sum_{\substack{m=-\infty \\ m\neq 0}}^{\infty} \frac{j}{m}\left[e^{-j\frac{m}{a}\tau_2} - e^{-j\frac{m}{a}\tau_1}\right] \frac{P_{j\frac{m}{a}}^{m}(\cos\theta)}{P_{j\frac{m}{a}}^{m}(-\cos\theta_o)}\, e^{j\frac{m}{a}\tau} \qquad \theta \geq \theta_o \tag{3-23}$$

3.5 Potential on the Boundary for an Arbitrary Gap

With an arbitrary gap between the arms of the spiral the problem of determining the potential distribution in the gap is complicated by the mixed boundary conditions.

Exact solutions for some two dimensional potential problems with mixed boundary conditions can be obtained by using conformal mapping techniques[11]. For example, an exact expression can be obtained for the potential distribution across a slit in an infinite plane sheet[12]. For a small gap in the equiangular spiral structure the potential in the gap might be approximated by using the distribution obtained from the plane sheet case, however, there does not appear to be a simple method of deriving an exact expression for the potential in the gap. Any method seems to depend on an iterative procedure,

the simultaneous solution of an infinite set of equations, or the equivalent. However, if the gap potential is approximated by using a finite number of terms in the Fourier expansion of Eq. 3-16, the least squares criterion[13] provides a method for determining the best values for the coefficients. Approximating with 2M+1 terms of the series and using the subscripts I and II to identify the approximate solutions for $\theta < \theta_o$ and $\theta > \theta_o$ respectively, the expressions for the potential are from Eqs. 3-15 and 3-18,

$$V_I(\theta,\tau) = \sum_{m=-M}^{M} C_m \frac{P_{j\frac{m}{a}}^{m}(\cos\theta)}{P_{j\frac{m}{a}}^{m}(\cos\theta_o)} e^{j\frac{m}{a}\tau} \qquad \theta < \theta_o$$

$$V_{II}(\theta,\tau) = \sum_{m=-M}^{M} C_m \frac{P_{j\frac{m}{a}}^{m}(-\cos\theta)}{P_{j\frac{m}{a}}^{m}(-\cos\theta_o)} e^{j\frac{m}{a}\tau} \qquad \theta > \theta_o \tag{3-24}$$

In terms of C_m the potential at $\theta = \theta_o$ is

$$V_I(\theta_o,\tau) = \sum_{m=-M}^{M} C_m e^{j\frac{m}{a}\tau} = V_{II}(\theta_o,\tau). \tag{3-25}$$

For $\tau_1 < \tau < \tau_2$ the error in the potential due to using a finite number of terms is

$$V_o - \sum_{m=-M}^{M} C_m e^{j\frac{m}{a}\tau}$$

and for $\tau_3 < \tau < \tau_4$ the error is

$$-V_o - \sum_{m=-M}^{M} C_m e^{j\frac{m}{a}\tau}$$

For $\theta < \theta_o$ the normal derivative of the potential is

$$\left.\frac{\partial V_I}{\partial\theta}\right]_{\theta=\theta_o} = \sum_{m=-M}^{M} A_m \frac{dP_{j\frac{m}{a}}^{m}(\cos\theta_o)}{d\theta} e^{j\frac{m}{a}\tau} \tag{3-26}$$

where

$$\left.\frac{d\,P^{m}_{j\frac{m}{a}}(\cos\theta_o)}{d\theta} = \frac{d\,P^{m}_{j\frac{m}{a}}(\cos\theta)}{d\theta}\right]_{\theta=\theta_o}$$

and for $\theta > \theta_o$

$$\left.\frac{\partial V_{II}}{\partial\theta}\right]_{\theta=\theta_o} = \sum_{m=-M}^{M} B_m \frac{dP^{m}_{j\frac{m}{a}}(-\cos\theta_o)}{d\theta} \qquad (3\text{-}27)$$

As the normal derivatives should be equal in the gap at $\theta = \theta_o$, the error is

$$\left.\frac{\partial V_I}{\partial\theta}\right]_{\theta=\theta_o} - \left.\frac{\partial V_{II}}{\partial\theta}\right]_{\theta=\theta_o} = \sum_{m=-M}^{M} \gamma_m C_m e^{j\frac{m}{a}\tau} \qquad (3\text{-}28)$$

where

$$\gamma_m = \frac{\dfrac{dP^{m}_{j\frac{m}{a}}(\cos\theta_o)}{d\theta}}{P^{m}_{j\frac{m}{a}}(\cos\theta_o)} - \frac{\dfrac{dP^{m}_{j\frac{m}{a}}(-\cos\theta_o)}{d\theta}}{P^{m}_{j\frac{m}{a}}(-\cos\theta_o)} \qquad (3\text{-}29)$$

The mean square error $\bar{M}$ over a period is

$$\bar{M} = \int_{\tau_1}^{\tau_2}\left[V_o - \sum_{m=-M}^{M} C_m e^{j\frac{m}{a}\tau}\right]^2 d\tau + \int_{\tau_2}^{\tau_3}\left[\sum_{m=-M}^{M} \gamma_m C_m e^{j\frac{m}{a}\tau}\right]^2 d\tau$$

$$+ \int_{\tau_3}^{\tau_4}\left[V_o + \sum_{m=-M}^{M} C_m e^{j\frac{m}{a}\tau}\right]^2 d\tau + \int_{\tau_4}^{\tau_1+2\pi a}\left[\sum_{m=-M}^{M} \gamma_m C_m e^{j\frac{m}{a}\tau}\right]^2 d\tau \qquad (3\text{-}30)$$

By setting the derivative of $\bar{M}$ with respect to each C_m equal to zero, a system of $2M + 1$ equations and $2M + 1$ unknowns is obtained for any non-zero width of the spiral arms. As V_o is real, C_{-m} is the complex conjugate of C_m, and the equations may be reduced to $M + 1$ equations and $M + 1$ unknowns. Using * to indicate the complex conjugate, the

first of these equations is

$$C_o \left[(\tau_2 - \tau_1 + \tau_4 - \tau_3)(1 - \gamma_o\gamma_o^*) + 2\pi a \gamma_o\gamma_o^* \right] - \sum_{m=1}^{M} (1 - \gamma_o\gamma_o^*) \left[C_m L_m + C_m^* L_{-m} \right] = V_o \left[\tau_2 - \tau_1 - \tau_4 + \tau_3 \right] \quad (3\text{-}31)$$

and the remaining M equations are obtained by using integer values of p from 1 to M in

$$C_p^* \left[(\tau_2 - \tau_1 + \tau_4 - \tau_3)(1 - \gamma_p\gamma_p^*) + 2\pi a \gamma_p\gamma_p^* \right] + \sum_{\substack{m=1 \\ m \neq p}}^{M} C_m^* L_{p-m} (1 - \gamma_p\gamma_m^*) + \sum_{m=0}^{M} C_m L_{p+m} (1 - \gamma_p\gamma_m) = \frac{a}{jp} V_o \left[e^{j\frac{p}{a}\tau_2} - e^{j\frac{p}{a}\tau_1} - e^{j\frac{p}{a}\tau_4} + e^{j\frac{p}{a}\tau_3} \right] \quad (3\text{-}32)$$

where

$$L_k = \frac{a}{jk} \left[e^{j\frac{k}{a}\tau_2} - e^{j\frac{k}{a}\tau_1} + e^{j\frac{k}{a}\tau_4} - e^{j\frac{k}{a}\tau_3} \right] . \quad (3\text{-}33)$$

The simultaneous solution of the M + 1 linear algebraic equations of Eqs. 3-31 and 3-32 gives the best values for the C_m's in the least squared sense for arbitrary parameters in the spiral structure, and Eq. 3-24 expresses the potential in terms of the C_m's.

Even though Eqs. 3-31 and 3-32 may be simplified somewhat by an appropriate choice of the various parameters, the labor involved in making a numerical calculation of the potential does not seem justified. The static solutions were originally considered to obtain a feeling for problems with spiral boundaries and, also, with the faint hope that there might be a simple relation between the static and time-varying solutions. The fact that relatively simple expressions for the potential can be derived when the gap between the spiral arms is small indicates that it is worthwhile, at least for this special case, to consider the much more difficult problem of determining the electromagnetic fields produced by the equiangular spiral antenna.

3.6 Expressions for the Electric Field Intensity

The three spherical components of the electric field intensity

can be determined by taking the negative of the gradient of the potential,

$$\underline{E} = - \text{grad } V \tag{3-34}$$

The resulting expressions for the electric field intensities in terms of the C_m's for $\theta < \theta_o$ are

$$E_r = \frac{1}{r} \sum_{m=-\infty}^{\infty} j_a^m C_m \frac{P_{j_a^m}^m (\cos\theta)}{P_{j_a^m}^m (\cos\theta_o)} e^{j_a^m \tau}$$

$$E_\theta = \frac{1}{r} \sum_{m=-\infty}^{\infty} C_m \frac{\frac{dP_{j_a^m}^m (\cos\theta)}{d\theta}}{P_{j_a^m}^m (\cos\theta_o)} e^{j_a^m \tau} \tag{3-35}$$

$$E_\phi = \frac{1}{r \sin\theta} \sum_{m=-\infty}^{\infty} - jm C_m \frac{P_{j_a^m}^m (\cos\theta)}{P_{j_a^m}^m (\cos\theta_o)} e^{j_a^m \tau}$$

and for $\theta > \theta_o$ the expressions are the same except that $P_{j_a^m}^m (\cos\theta)$ and $\frac{dP_{j_a^m}^m (\cos\theta)}{d\theta}$ are replaced by $P_{j_a^m}^m (-\cos\theta)$ and $\frac{dP_{j_a^m}^m (-\cos\theta)}{d\theta}$ respectively. It is noted that E_r and E_ϕ for any spiral structure and all θ are simply related by

$$E_\phi = - \frac{a}{\sin\theta} E_r \tag{3-36}$$

for the static fields.

4. THE ELECTROMAGNETIC FIELDS

4.1 Introduction

To determine exact solutions to a general antenna problem, Maxwell's equations are often used as a starting point. In differential form for a homogeneous, isotropic, sourcefree region they are

$$\begin{aligned} \text{curl } \bar{\underline{E}} &= -\mu \frac{\partial \bar{\underline{H}}}{\partial t} \\ \text{curl } \bar{\underline{H}} &= \epsilon \frac{\partial \bar{\underline{E}}}{\partial t} . \end{aligned} \tag{4-1}$$

The elimination of $\bar{\underline{E}}$ (or $\bar{\underline{H}}$) in Eq. 4-1 results in the vector wave equation

$$\text{curl curl } \bar{\underline{E}} + \mu \epsilon \frac{\partial^2 \bar{\underline{E}}}{\partial t^2} = 0 \tag{4-2}$$

in $\bar{\underline{E}}$ (or $\bar{\underline{H}}$). By considering monochromatic sinusoidal oscillations the time dependence may be removed. Using the complex number representation with $e^{j\omega t}$ time convention

$$\begin{aligned} \bar{\underline{E}} &= \text{Re}\left[\underline{E}\, e^{j\omega t}\right] \\ \bar{\underline{H}} &= \text{Re}\left[\underline{H}\, e^{j\omega t}\right], \end{aligned} \tag{4-3}$$

and the vector wave equation reduces to the vector Helmholtz equation in $\underline{E}$ (or $\underline{H}$)

$$\text{curl curl } \underline{E} = \beta^2 \underline{E} \tag{4-4}$$

with $\beta^2 = \omega^2 \mu \epsilon$.

It is desired to find solutions of Eq. 4-4 which satisfy the boundary conditions of an equiangular spiral structure and meet the physical requirements of an electromagnetic field.

4.2 An Orthogonal Spiral Coordinate System

To obtain the needed solutions of the vector Helmholtz equation,

it is very desirable to have an orthogonal coordinate system which "fits" the boundaries of the equiangular spiral structure. When the antenna is developed in the plane $\theta = \pi/2$ an orthogonal coordinate system which "fits" the antenna may be developed. In terms of the usual cylindrical coordinates ρ, ϕ, and z let

$$\begin{aligned} \xi &= \rho\, e^{-a\phi} \\ \eta &= \rho\, e^{\phi/a} \\ z &= z \end{aligned} \tag{4-5}$$

and ξ, η, and z form an orthogonal system. In the plane z = 0 a line of constant ξ coincides with an edge of the antenna, and lines of constant η form a set of equiangular spirals which are perpendicular to the edges of the antenna. However, this coordinate system is not one of the limited number of orthogonal systems in which the vector Helmholtz equation is separable, and no method could be found to adapt it to an exact solution of the equiangular spiral antenna problem. This system is useful in solving spiral problems in which there is no variation in the z direction, and is mentioned here as it seems to be an "obvious" system to use.

4.3 An Oblique Spiral Coordinate System

The fact that the static potentials can be expressed in terms of only the two variables s and θ suggests their use as the basis of a spiral coordinate system. The time-varying fields can not be expressed in terms of s and θ only, and the "logical" choice for a third variable is one which will complete an orthogonal system. Letting $p = p(r,\theta,\phi)$ represent the third coordinate variable, a unit vector $\hat{\underline{p}}$ which is

normal to a surface of constant p is given by

$$\hat{\underline{p}} = \frac{\text{grad } p}{|\text{grad } p|} \quad . \tag{4-6}$$

To form an orthogonal system $\hat{\underline{p}}$ must satisfy

$$\hat{\underline{p}} = \hat{\underline{s}} \times \hat{\underline{\theta}} \tag{4-7}$$

where $\hat{\underline{s}}$ and $\hat{\underline{\theta}}$ are unit vectors normal to constant s and p surfaces respectively. The expression for $\hat{\underline{s}}$ is

$$\hat{\underline{s}} = \frac{\text{grad } s}{|\text{grad } s|} = \frac{\sin\theta}{\sqrt{a^2 + \sin^2\theta}}\,\hat{\underline{r}} - \frac{a}{\sqrt{a^2 + \sin^2\theta}}\,\hat{\underline{\phi}} \quad , \tag{4-8}$$

Combining Eqs. 4-6, 4-7, and 4-8 gives

$$\frac{\text{grad } p}{|\text{grad } p|} = \frac{a}{\sqrt{a^2 + \sin^2\theta}}\,\hat{\underline{r}} + \frac{\sin\theta}{\sqrt{a^2 + \sin^2\theta}}\,\hat{\underline{\phi}} \tag{4-9}$$

which leads directly to the three separate equations

$$\frac{\partial p}{\partial r} = |\text{grad } p| \frac{a}{\sqrt{a^2 + \sin^2\theta}}, \quad \frac{\partial p}{\partial \theta} = 0, \text{ and } \frac{\partial p}{\partial \phi} = |\text{grad } p| \frac{r \sin^2\theta}{\sqrt{a^2 + \sin^2\theta}} \quad . \tag{4-10}$$

From Eq. 4-10, p must be both independent of θ, and

$$\frac{\partial p/\partial r}{\partial p/\partial \phi} = \frac{a}{r \sin^2\theta} \quad .$$

The desired function $p(r,\theta,\phi)$ does not exist, and it is not possible to form an orthogonal coordinate system using s and θ as two of the variables.

For lack of a better set, the variables

$$\begin{aligned} u &= \beta r \\ \theta &= \theta \\ s &= re^{-a\phi} \end{aligned} \tag{4-11}$$

are used. This oblique coordinate system has two distinct advantages. It permits separated solutions of the vector Helmholtz equation which

are similar to those obtained with the spherical coordinate system. Also, with it both the vector Helmholtz equation and the boundary conditions are independent of β. As this system is oblique it is often convenient to express the various components of the field vectors in a mixed system using the spherical unit vectors $\hat{\underline{r}}$, $\hat{\underline{\theta}}$, and $\hat{\underline{\phi}}$, and the spiral variables u, θ and s. At times the spiral unit vectors $\hat{\underline{s}}$ and $\hat{\underline{p}}$ given by

$$\hat{\underline{s}} = \frac{\sin\theta}{\sqrt{a^2 + \sin^2\theta}}\hat{\underline{r}} - \frac{a}{\sqrt{a^2 + \sin^2\theta}}\hat{\underline{\phi}}$$

$$\hat{\underline{p}} = \frac{a}{\sqrt{a^2 + \sin^2\theta}}\hat{\underline{r}} + \frac{\sin\theta}{\sqrt{a^2 + \sin^2\theta}}\hat{\underline{\phi}} \qquad (4\text{-}12)$$

and the field intensities in these directions will also be used.

4.4 The Vector Helmholtz Equation with Spiral Variables

The vector Helmholtz equation expanded in spherical coordinates[14] is given in Eq. 4-13. For $\beta \neq 0$ in a mixed spherical spiral system Eq. 4-13 becomes Eq. 4-14. Originally the vector Helmholtz equation is a function of four variables r, θ, ϕ, and β, but Eq. 4-14 (and the boundary conditions) are a function of only the three variables u, s, and θ.

4.5 Separated Solutions

As Maxwell's equations include the relation div $\underline{E} = 0$, the vector solutions of Eq. 4-14 may be expressed in terms of only two scalar functions. One of the scalar functions can be chosen to generate a transverse electric (TE) field with $E_r = 0$, and the second scalar function chosen to generate a transverse magnetic (TM) field with $H_r = 0$. Using a prime to indicate the fields of the TE solution and double prime for the fields of the TM solution, the total electric

$$\begin{bmatrix} \frac{1}{r^2 \sin\theta}\,\hat{r} & \frac{1}{r \sin\theta}\,\hat{\theta} & \frac{1}{r}\,\hat{\phi} \\ \frac{\partial}{\partial r} & \frac{\partial}{\partial \theta} & \frac{\partial}{\partial \phi} \\ \frac{1}{r^2 \sin\theta}\left[\frac{\partial}{\partial\theta}(r \sin\theta E_\phi) - \frac{\partial}{\partial\phi}(r E_\theta)\right] & \frac{1}{\sin\theta}\left[\frac{\partial}{\partial\phi} E_r - \frac{\partial}{\partial r}(r \sin\theta E_\phi)\right] & \sin\theta\left[\frac{\partial}{\partial r}(r E_\theta) - \frac{\partial}{\partial\theta}(E_r)\right] \end{bmatrix} = \beta^2 (E_r \hat{r} + E_\theta \hat{\theta} + E_\phi \phi) \tag{4-13}$$

$$\begin{bmatrix} \frac{1}{u^2 \sin\theta}\,\hat{r} & \frac{1}{u \sin\theta}\,\hat{\theta} & \frac{1}{u}\,\hat{\phi} \\ \frac{\partial}{\partial u} + \frac{s}{u}\frac{\partial}{\partial s} & \frac{\partial}{\partial\theta} & -as\frac{\partial}{\partial s} \\ \frac{1}{u \sin\theta}\left[\frac{\partial}{\partial\theta}(\sin\theta E_\phi) + as\frac{\partial}{\partial s}(E_\theta)\right] & \left[\frac{-as}{\sin\theta}\frac{\partial E_r}{\partial s} - \frac{\partial}{\partial u}(u E_\phi) - s\frac{\partial}{\partial s}(E_\phi)\right] & \sin\theta\left[\frac{\partial}{\partial u}(uE_\theta) + s\frac{\partial}{\partial s}(E_\theta) - \frac{\partial}{\partial\theta}(E_r)\right] \end{bmatrix} = (E_r \hat{r} + E_\theta \hat{\theta} + E_\phi \phi) \tag{4-14}$$

and magnetic fields are

$$\underline{E} = \underline{E}' + \underline{E}''$$

$$\underline{H} = \underline{H}' + \underline{H}'' \tag{4-15}$$

Considering first the TE case, a scalar function $\Pi' = \Pi'(u,\theta,s)$ which gives a field with $E_r' = 0$ may be derived from

$$\underline{E}' = \frac{\text{curl } \hat{r}\, \Pi'}{\beta} \ . \tag{4-16}$$

$\underline{E}'$ satisfies all three of the equations contained in Eq. 4-13 if Π' is a solution of

$$\frac{1}{\sin\theta}\left[\frac{\partial}{\partial\theta}\left(\sin\theta\,\frac{\partial\Pi'}{\partial\theta}\right)\right] + \left(1 + \frac{a^2}{\sin^2\theta}\right) s\,\frac{\partial}{\partial s}\left(s\,\frac{\partial\Pi'}{\partial s}\right) + us\,\frac{\partial^2\Pi'}{\partial s\partial u}$$

$$+ u^2\,\frac{\partial}{\partial u}\left(\frac{s}{u}\,\frac{\partial\Pi'}{\partial s}\right) + u^2\,\frac{\partial^2\Pi'}{\partial u^2} + u^2\Pi' = 0 \ . \tag{4-17}$$

The solutions of Eq. 4-17 will be obtained in separated form, and as more than one of the separated solutions will be needed, let

$$\Pi' = \sum_{\kappa}{}' A'_\kappa\, \pi'_\kappa \tag{4-18}$$

where A'_κ is a constant and $\sum_{\kappa}{}'$ indicates a summation over all appropriate values of the separation constants. Making use of the same substitution that proved useful in the static solutions,

$$\tau = \ln s,$$

Π' satisfies Eq. 4-17 if π'_κ is a solution of

$$\frac{1}{\sin\theta}\left[\frac{\partial}{\partial\theta}\left(\sin\theta\,\frac{\partial\pi'_\kappa}{\partial\theta}\right)\right] + \left(1 + \frac{a^2}{\sin^2\theta}\right)\frac{\partial^2\pi'_\kappa}{\partial\tau^2} + u\,\frac{\partial^2\pi'_\kappa}{\partial u\partial\tau} + u^2\left(\frac{1}{u}\,\frac{\partial\pi'_\kappa}{\partial\tau}\right)$$

$$+ u^2\,\frac{\partial^2\pi'_\kappa}{\partial u^2} + u^2\pi_\kappa = 0 \tag{4-20}$$

Assuming a separated solution of the form

$$\Pi'_K = U(u)\,\Theta(\theta)\,e^{j\frac{m}{a}\tau} \tag{4-21}$$

with U independent of θ and τ, and Θ independent of u and τ, Π'_K is a solution of Eq. 4-20 if U and θ satisfy the ordinary differential equations

$$\frac{d^2\Theta}{d\theta^2} + \operatorname{ctn}\theta\,\frac{d\Theta}{d\theta} + \left[\nu(\nu+1) - \frac{m^2}{\sin^2\theta}\right]\Theta = 0 \tag{4-22}$$

and

$$u^2\frac{\partial^2 U}{\partial u^2} + j\frac{m}{a}\,2u\,\frac{\partial U}{\partial u} + \left[u^2 - \nu(\nu+1) - j\frac{m}{a}\left(1-j\frac{m}{a}\right)\right]U = 0 \tag{4-23}$$

ν is a separation constant, and the appropriate values for ν and m are still to be determined. To have fields which vary periodically in ϕ with a period of $2\pi a$, m must be integral. It will later be shown that the required values of ν are complex.

Eq. 4-22 is similar to Eq. 3-10 obtained in the static solutions and is a form of the associated Legendre equation of degree ν and order m. The two linearly independent solutions of Eq. 4-22 are the associated Legendre functions of the first kind $P_\nu^m(\cos\theta)$ and the second kind $Q_\nu^m(\cos\theta)$. For m zero or a positive integer there are no solutions of Eq. 4-22 which are finite for all real values of θ unless ν is an integer greater than or equal to m. Since ν is not to be an integer, it is again necessary to consider solutions in two regions as illustrated in Fig. 4. For the required values of ν, $Q_\nu^m(\cos\theta)$ becomes infinite both at $\theta = 0$ and π and is not useful for representing a physical field. $P_\nu^m(\cos\theta)$ is finite for all θ except $\theta = \pi$, and for m zero or a positive integer is given by

$$P_\nu^m(\cos\theta) = \frac{(-)^m\Gamma(\nu+m+1)}{2^m\,\Gamma(\nu-m+1)} \times \frac{\sin^m\theta}{m!}\,F\left(m-\nu, \nu+m+1;\ m+1;\ \sin^2\frac{\theta}{2}\right) \tag{4-24}$$

and for m a negative integer by

$$P_\nu^m(\cos\theta) = \frac{\sin^{-m}\theta}{2^{-m}(-m)!}\, F(\nu-m+1,\ -m-\nu;\ 1-m;\ \sin^2\frac{\theta}{2}) \tag{4-25}$$

$P_\nu^m(\cos\theta)$ may be used in representing the fields in region I for $\theta < \theta_o$, and $P_\nu^m(-\cos\theta)$ used in region II for $\theta > \theta_o$.

Solutions of Eq. 4-23 can be expressed in terms of the Bessel functions[15] as

$$U(u) = u^{\frac{1}{2}} u^{-j\frac{m}{a}} Z_{\nu+\frac{1}{2}}(u) \tag{4-26}$$

where $Z_{\nu+\frac{1}{2}}(u)$ represents a Bessel function of order $\nu+\frac{1}{2}$. Watson[16] has given a very detailed account of the properties of the Bessel functions of complex order. The Bessel function of the first kind $J_{\nu+\frac{1}{2}}(u)$ of order $\nu+\frac{1}{2}$ is defined by[17]

$$J_{\nu+\frac{1}{2}}(u) = \sum_{p=0}^{\infty} \frac{(-)^p (\frac{u}{2})^{\nu+2p+\frac{1}{2}}}{p!\ \Gamma(\nu+p+1)} \tag{4-27}$$

For complex values of ν, $J_{\nu+\frac{1}{2}}(u)$ and $J_{-\nu-\frac{1}{2}}(u)$ are linearly independent solutions of Bessel's equation, and, therefore the needed solutions of Eq. 4-23 can be expressed by using only Bessel functions of the first kind.

Using the subscripts I and II to indicate solutions valid for $\theta < \theta_o$ and $\theta > \theta_o$ respectively, the general forms for the scalar function Π' which generates the TE part of the field are

for region I, $\theta < \theta_o$

$$\Pi_I' = \sum_{\nu m} A_\nu'^m\, u^{\frac{1}{2}} u^{-j\frac{m}{a}}\, J_{\nu+\frac{1}{2}}(u)\, P_\nu^m(\cos\theta)\, e^{j\frac{m}{a}\tau} \tag{4-28}$$

for region II, $\theta > \theta_o$

$$\Pi'_{II} = \sum_{\nu m} B'^{m}_{\nu} u^{\frac{1}{2}} u^{-j\frac{m}{a}} J^{(u)}_{\nu+\frac{1}{2}} P^{m}_{\nu}(-\cos\theta)\, e^{j\frac{m}{a}\tau} \tag{4-28}$$

In a similar manner the expressions for the scalar Π'' which generates the TM part of the field are

for region I, $\theta < \theta_o$,

$$\Pi''_{I} = \sum_{\bar{\nu} m} A'^{m}_{\bar{\nu}} u^{\frac{1}{2}} u^{-j\frac{m}{a}} J^{(u)}_{\bar{\nu}+\frac{1}{2}} P^{m}_{\bar{\nu}}(\cos\theta)\, e^{j\frac{m}{a}\tau}$$

for region II, $\theta > \theta_o$ (4-29)

$$\Pi''_{II} = \sum_{\bar{\nu} m} B''^{m}_{\bar{\nu}} u^{\frac{1}{2}} u^{-j\frac{m}{a}} J^{(u)}_{\bar{\nu}+\frac{1}{2}} P^{m}_{\bar{\nu}}(-\cos\theta)\, e^{j\frac{m}{a}\tau}$$

where $\bar{\nu}$ is the separation constant.

From Eqs. 4-16, 4-28, 4-29, and Maxwell's equations, the following expressions for the electric and magnetic fields with spiral variables may now be derived.

TE Components - Region I $\theta < \theta_o$

$\eta = \sqrt{\frac{\mu}{\epsilon}}$

$$E'_r = 0 \tag{4-30a}$$

$$E'_\theta = -\frac{d}{u \sin\theta} \sum_{m\nu} A'^{m}_{\nu} (j\tfrac{m}{a})\, u^{\frac{1}{2}} u^{-j\frac{m}{a}} J^{(u)}_{\nu+\frac{1}{2}} P^{m}_{\nu}(\cos\theta)\, e^{j\frac{m}{a}\tau} \tag{4-30b}$$

$$E'_\phi = -\frac{1}{u} \sum_{m\nu} A'^{m}_{\nu} u^{\frac{1}{2}} u^{-j\frac{m}{a}} J^{(u)}_{\nu+\frac{1}{2}} \frac{dP^{m}_{\nu}(\cos\theta)}{d\theta} e^{j\frac{m}{a}\tau} \tag{4-30c}$$

$$-j\eta H'_r = \frac{1}{u^2} \sum_{m\nu} \nu(\nu+1)\, A'^{m}_{\nu} u^{\frac{1}{2}} u^{-j\frac{m}{a}} J^{(u)}_{\nu+\frac{1}{2}} P^{m}_{\nu}(\cos\theta)\, e^{j\frac{m}{a}\tau} \tag{4-30d}$$

$$-j\eta H_\theta' = \frac{1}{u} \sum_{m\nu} A_\nu'^m \, u^{\frac{1}{2}} u^{-j\frac{m}{a}} \left[-\frac{\nu}{u} J_{\nu+\frac{1}{2}}(u) + J_{\nu-\frac{1}{2}}(u) \right] \frac{dP_\nu^m(\cos\theta)}{d\theta} \, e^{j\frac{m}{a}\tau} \tag{4-30e}$$

$$-j\eta H_\phi' = -\frac{a}{u \sin\theta} \sum_{m\nu} A_\nu'^m (j\tfrac{m}{a}) \, u^{\frac{1}{2}} u^{-j\frac{m}{a}} \left[-\frac{\nu}{u} J_{\nu+\frac{1}{2}}(u) + J_{\nu-\frac{1}{2}}(u) \right] P_\nu^m(\cos\theta) e^{j\frac{m}{a}\tau} \tag{4-30f}$$

TM Components - Region I $\theta < \theta_o$

$$E_r'' = \frac{1}{u^2} \sum_{m\bar{\nu}} \bar{\nu}(\bar{\nu}+1) \, A_{\bar{\nu}}''^m \, u^{\frac{1}{2}} u^{-j\frac{m}{a}} J_{\bar{\nu}+\frac{1}{2}}(u) \, P_{\bar{\nu}}^m(\cos\theta) \, e^{j\frac{m}{a}\tau} \tag{4-30g}$$

$$E_\theta'' = \frac{1}{u} \sum_{m\bar{\nu}} A_{\bar{\nu}}''^m \, u^{\frac{1}{2}} u^{-j\frac{m}{a}} \left[-\frac{\bar{\nu}}{u} J_{\bar{\nu}+\frac{1}{2}}(u) + J_{\bar{\nu}-\frac{1}{2}}(u) \right] \frac{d P_{\bar{\nu}}^m(\cos\theta)}{d\theta} \, e^{j\frac{m}{a}\tau} \tag{4-30h}$$

$$E_\phi'' = -\frac{a}{u \sin\theta} \sum_{m\bar{\nu}} A_{\bar{\nu}}''^m (j\tfrac{m}{a}) u^{\frac{1}{2}} u^{-j\frac{m}{a}} \left[-\frac{\bar{\nu}}{u} J_{\bar{\nu}+\frac{1}{2}}(u) + J_{\bar{\nu}-\frac{1}{2}}(u) \right] P_{\bar{\nu}}^m(\cos\theta) e^{j\frac{m}{a}\tau} \tag{4-30i}$$

$$-j\eta H_r'' = 0 \tag{4-30j}$$

$$-j\eta H_\theta'' = -\frac{a}{u \sin\theta} \sum_{m\bar{\nu}} A_\nu''^m (j\tfrac{m}{a}) \, u^{\frac{1}{2}} u^{-j\frac{m}{a}} J_{\bar{\nu}+\frac{1}{2}}(u) \, P_{\bar{\nu}}^m(\cos\theta) \, e^{j\frac{m}{a}\tau} \tag{4-30k}$$

$$-j\eta H_\phi'' = -\frac{1}{u} \sum_{m\bar{\nu}} A_\nu''^m \, u^{\frac{1}{2}} u^{-j\frac{m}{a}} J_{\bar{\nu}+\frac{1}{2}}(u) \, \frac{d P_{\bar{\nu}}^m(\cos\theta)}{d\theta} \, e^{j\frac{m}{a}\tau} . \tag{4-30l}$$

In region II for $\theta > \theta_o$ the general expressions for the fields are the same as those given in Eq. 4-30 with $A_\nu'^m$, $A_{\bar{\nu}}''^m$, $P_\nu^m(\cos\theta)$, $\frac{d P_\nu^m(\cos\theta)}{d\theta}$, $P_{\bar{\nu}}^m(\cos\theta)$, and $\frac{d P_{\bar{\nu}}^m(\cos\theta)}{d\theta}$ replaced by $B_\nu'^m$, $B_{\bar{\nu}}''^m$, $P_\nu^m(-\cos\theta)$, $\frac{d P_\nu^m(-\cos\theta)}{d\theta}$, $P_{\bar{\nu}}^m(-\cos\theta)$, and $\frac{d P_{\bar{\nu}}^m(-\cos\theta)}{d\theta}$.

4.6 The Fields from Specified Conditions on the Boundary

The values of ν, m, $A_\nu'^m$, $A_{\bar{\nu}}''^m$, $B_\nu'^m$ and $B_{\bar{\nu}}''^m$ of Eq. 4-30 can be determined in terms of the tangential electric field at $\theta = \theta_o$.

For an antenna developed on the cone $\theta = \theta_o$ with one conducting arm between τ_1 and τ_2, and the other between τ_3 and τ_4, the fields are periodic in τ; the tangential field intensity over one period may be expressed as

$$\begin{aligned} E_r \big]_{\theta=\theta_o} &= 0 \qquad \tau_1 < \tau < \tau_2, \quad \tau_3 < \tau < \tau_4 \\ &= f(u,\tau) \quad \tau_2 < \tau < \tau_3, \quad \tau_4 < \tau < \tau_1 + 2\pi a \\ E_\phi \big]_{\theta=\theta_o} &= 0 \qquad \tau_1 < \tau < \tau_2, \quad \tau_3 < \tau < \tau_4 \\ &= g(u,\tau) \quad \tau_2 < \tau < \tau_3, \quad \tau_4 < \tau < \tau_1 + 2\pi a \end{aligned} \tag{4-31}$$

$f(u,\tau)$ and $g(u,\tau)$ are the r and ϕ components, respectively, of the electric field intensity in the gap and are assumed specified.

As $E'_r = 0$, $A^{'}_{\bar{\nu}m}$ and $B^{''}_{\bar{\nu}m}$ are determined from $E_r \big]_{\theta=\theta_o}$ only. For any constant u, if $E_r \big]_{\theta=\theta_o}$ in one period is continuous except for a finite number of finite discontinuities and has only a finite number of maxima and minima, it may be represented by a Fourier series whose coefficients are functions of u alone.

Thus,

$$E_r \big]_{\theta=\theta_o} = \sum_{m=-\infty}^{\infty} f_m(u)\, e^{j\frac{m}{a}\tau} \tag{4-32}$$

with

$$f_m(u) = \frac{1}{2\pi a}\int_{\tau_2}^{\tau_3} f(u,\tau)\, e^{-j\frac{m}{a}\tau}\, d\tau + \frac{1}{2\pi a}\int_{\tau_4}^{\tau_1+2\pi a} f(u,\tau)\, e^{-j\frac{m}{a}\tau}\, d\tau . \tag{4-33}$$

Making use of Gegenbauer's generalization of Neumann's expansion[18], $uf_m(u)$ may be expanded in a series of Bessel functions. Considering u as a complex variable, if $uf_m(u)$ is an entire function it may be

expanded in the series

$$uf_m(u) = \sum_{n=0}^{\infty} C''^{m}_{n+j\frac{m}{a}} \; u^{-\frac{1}{2}} u^{-j\frac{m}{a}} \; J^{(u)}_{n+\frac{1}{2}+j\frac{m}{a}} \tag{4-34}$$

which converges for all u. The coefficients $C''^{m}_{n+j\frac{m}{a}}$ may be found by making use of Gegenbauer's polynomial $\Pi^{(u)}_{n,K}$ defined by[19]

$$\Pi^{(u)}_{n,K} = \frac{2^{n+K}(n+K)}{u^{n+1}} \sum_{p=0}^{\leq \frac{1}{2}n} \frac{\Gamma(n-p+K)}{(p)!} \left(\frac{u}{2}\right)^{2p} \tag{4-35}$$

$\Pi^{(u)}_{n,K}$ and the Bessel functions of the first kind satisfy the relations

$$\begin{aligned} \int_c u^{-K} J^{(u)}_{n+K} \Pi^{(u)}_{k,K} \, du &= 0 \qquad k^2 \neq n^2 \\ \int_c u^{-K} J^{(u)}_{n+K} \Pi^{(u)}_{n,K} \, du &= 2\pi j \end{aligned} \tag{4-36}$$

where c is a closed contour encircling the origin once in a positive direction. Using these expressions, $C''^{m}_{n+j\frac{m}{a}}$ can be expressed in terms of $f_m(u)$ as

$$C''^{m}_{n+j\frac{m}{a}} = \frac{1}{2\pi j} \int_c uf_m(u) \Pi^{(u)}_{n,\frac{1}{2}+j\frac{m}{a}} \, du, \tag{4-37}$$

or in terms of $f(u,\tau)$ as

$$C''^{m}_{n+j\frac{m}{a}} = \frac{1}{ja(2\pi)^2} \int_c \left[\int_{\tau_2}^{\tau_3} uf(u,\tau) \, e^{-j\frac{m}{a}\tau} \, d\tau + \int_{\tau_4}^{\tau_1+2\pi a} uf(u,\tau) \, e^{-j\frac{m}{a}\tau} \, d\tau \right] \Pi^{(u)}_{n,\frac{1}{2}+j\frac{m}{a}} \, du \tag{4-38}$$

$E_r \big]_{\theta=\theta_o}$ has now been expanded in the double series

$$E_r \big]_{\theta=\theta_o} = \sum_{m=-\infty}^{\infty} \sum_{n=0}^{\infty} C''^{m}_{n+j\frac{m}{a}} \; u^{-\frac{3}{2}} \; u^{-j\frac{m}{a}} \; J^{(u)}_{n+\frac{1}{2}+j\frac{m}{a}} \; e^{j\frac{m}{a}\tau} \tag{4-39}$$

Comparing Eqs. 4-39 and 4-30g the characteristic values of $\bar{\nu}$ are

$$\bar{\nu} = n+j\frac{m}{a} \tag{4-40}$$

with n taking on integer values from 0 to $+\infty$, and m integer values from $-\infty$ to $+\infty$. Also,

$$A''^{m}_{\bar{\nu}} = A''^{m}_{n+j\frac{m}{a}} = \frac{C''^{m}_{n+j\frac{m}{a}}}{(n+j\frac{m}{a})(n+1+j\frac{m}{a})\ P^{m}_{n+j\frac{m}{a}}(\cos\theta_o)} \tag{4-41}$$

and

$$B''^{m}_{\bar{\nu}} = B''^{m}_{n+j\frac{m}{a}} = \frac{C''^{m}_{n+j\frac{m}{a}}}{(n+j\frac{m}{a})(n+1+j\frac{m}{a})\ P^{m}_{n+j\frac{m}{a}}(-\cos\theta_o)}$$

Therefore, Eqs. 4-38, 4-41, and 4-30 used in this order give explicit expressions for the TM components of all the electric and magnetic fields in terms of the specified tangential electric field in the gap.

After the TM components of the field are determined, the TE components may be obtained in a similar manner.

Expanding $E_\phi\big]_{\theta=\theta_o}$ in a Fourier series,

$$E'_\phi\Big]_{\theta=\theta_o} = \sum_{m=-\infty}^{\infty} g_m(u)\ e^{j\frac{m}{a}\tau} \tag{4-42}$$

with

$$2\pi a\ g_m(u) = \int_{\tau_2}^{\tau_3} g(u,\tau)e^{-j\frac{m}{a}\tau}d\tau + \int_{\tau_4}^{\tau_1+2\pi a} g(u,\tau)e^{-j\frac{m}{a}\tau}d\tau - \int_{\tau_1}^{\tau_1+2\pi a} E''_\phi\Big]_{\theta=\theta_o} e^{-j\frac{m}{a}\tau}d\tau \tag{4-43}$$

Expanding $ug_m(u)$ in a series of Bessel functions,

$$ug_m(u) = \sum_{n=-1}^{\infty} C'^{m}_{n+j\frac{m}{a}}\ u^{\frac{1}{2}}\ u^{-j\frac{m}{a}}\ J^{(u)}_{n+\frac{1}{2}+j\frac{m}{a}} \tag{4-44}$$

with

$$C'^{m}_{n+j\frac{m}{a}} = \frac{1}{2\pi j}\int_c ug_m(u)\ H^{(u)}_{n+1,-\frac{1}{2}+j\frac{m}{a}}\ du \tag{4-45}$$

These equations express $E_{\phi}'\Big]_{\theta=\theta_o}$ in a double series as

$$E_{\phi}'\Big]_{\theta=\theta_o} = \sum_{m=-\infty}^{\infty}\sum_{n=-1}^{\infty} C'^{m}_{n+j\frac{m}{a}}\, u^{-\frac{1}{2}}\, e^{-j\frac{m}{a}} J^{(u)}_{n+\frac{1}{2}+j\frac{m}{a}}\, e^{j\frac{m}{a}\tau} \tag{4-46}$$

Comparing Eq. 4-46 with Eq. 4-30b the characteristic values of ν are

$$\nu = n + j\frac{m}{a} \tag{4-47}$$

with n taking on integer values from - 1 to $+\infty$, and m integer values from $-\infty$ to $+\infty$. Also,

$$A'^{m}_{\nu} = A'^{m}_{n+j\frac{m}{a}} = \frac{-C'^{m}_{n+j\frac{m}{a}}}{\dfrac{d\, P^{m}_{n+j\frac{m}{a}}(\cos\theta_o)}{d\theta}} \tag{4-48}$$

and

$$B'^{m}_{\nu} = B'^{m}_{n+j\frac{m}{a}} = \frac{-C'^{m}_{n+j\frac{m}{a}}}{\dfrac{d\, P^{m}_{n+j\frac{m}{a}}(-\cos\theta_o)}{d\theta}}$$

In terms of g(u,τ). Eq. (4-45) can be expressed as

$$C'^{m}_{n+j\frac{m}{a}} = \frac{1}{ja(2\pi)^2}\int_c \left[\int_{\tau_2}^{\tau_3} ug(u,\tau)e^{-j\frac{m}{a}\tau}\,d\tau + \int_{\tau_4}^{\tau_1+2\pi a} ug(u,\tau)e^{-j\frac{m}{a}\tau}\,d\tau\right] A^{(u)}_{n+1,-\frac{1}{2}+j\frac{m}{a}}\,du$$

$$+ \frac{jm}{\sin\theta_o}\left[\frac{C''^{m}_{n+1+j\frac{m}{a}}}{(n+1+j\frac{m}{a})(2n+3+2j\frac{m}{a})} - \frac{C''^{m}_{n-1+j\frac{m}{a}}}{(n+j\frac{m}{a})(2n-1+2j\frac{m}{a})}\right] \tag{4-49}$$

where $C''^{m}_{k+j\frac{m}{a}}$ is taken as zero for $k \leq 0$.

Eqs. 4-49, 4-48, and 4-30 used in sequence give explicit expressions for the TE components of all the electric and magnetic fields in terms of a specified tangential electric field in the gap.

4.7 The Mixed Boundary Conditions

Having derived expressions for the electromagnetic fields at all points in terms of the tangential electric field at $\theta = \theta_o$, one is faced with the more recondite problem of determining $\underline{E}_{tan}$ at $\theta = \theta_o$ when the antenna is excited by a source at the origin. Assuming $\underline{E}_{tan}$ in the gap, and from it calculating the performance of the antenna, is essentially the equivalent of assuming the current distribution on an antenna. Useful results are often obtained from assumed current distributions, and an assumption for $\underline{E}_{tan}$ in the gap based on experimental measurements could be made. However, this procedure somewhat avoids the problem, and it would be much more desirable if exact expressions could be derived. The correct $\underline{E}_{tan}$ in the gap will make $\underline{H}_{tan}$ continuous across the gap, will correspond to a finite input voltage at the origin, and will make the origin a source of energy. The complication of making $\underline{H}_{tan}$ continuous across the gap is due to the fact that there are no solutions of the associated Legendre equation of order m and degree $n + j\frac{m}{a}$ which are finite for all θ. This makes the general problem one of mixed boundary conditions with $\underline{E}_{tan}$ specified as zero over the surface of the metal arms and $\underline{H}_{tan}$ specified as continuous across the gap. The solution of problems in electromagnetic theory with mixed boundary conditions normally lead to an iterative procedure where an approximate solution is assumed and from it better approximations calculated, or to the simultaneous solution of a large (infinite) set of simultaneous equations.

Regardless of the method used it seems highly desirable at

this point to consider approximations or simplifications which will reduce the complexity of the problem. Using the static solutions as a guide, the logical simplification is to consider that the gaps between the antenna arms are small. The equiangular spiral antenna with small gaps is a practical antenna having broadband characteristics. To determine $\underline{E}_{tan}$ in a wide gap one must find both E_r and E_ϕ, each of which is a function of two variables, u and τ. For a narrow gap, however, the electric field is always across the gap, so it is necessary to find only E_s which is a function of u only. Also, by making the arms of equal width the variations of E_s in the gap with u will be the same for both gaps. For these reasons the next section will develop a routine for determining the electric field produced in a small gap of a balanced equiangular spiral antenna by a source at the origin.

5. THE BALANCED ANTENNA WITH NARROW GAPS

5.1 The Electric Fields at $\theta = \theta_o$

As the gaps between the arms of the equiangular spiral antenna are made narrow, $\tau_2 \rightarrow \tau_3$ and $\tau_4 \rightarrow \tau_1 + 2\pi a$. If the antenna is also balanced (i.e. the arms are the same width) $\tau_3 = \tau_1 + \pi a$. Without loss of generality, the antenna can be rotated on the coordinate axis to make

$$\begin{aligned} \tau_1 &= 0 \\ \tau_3 &= \pi a. \end{aligned} \tag{5-1}$$

When the gaps are narrow it is convenient to consider the components of the electric and magnetic fields which are in the directions of the unit vectors $\hat{\underline{s}}$ and $\hat{\underline{p}}$ defined by Eq. 4-12. Using Eq. 4-12 the s and p components of the electric (magnetic) fields E_s (H_s) and E_p (H_p) are

$$E_s = \frac{\sin\theta}{\sqrt{a^2 + \sin^2\theta}} E_r - \frac{a}{\sqrt{a^2 + \sin^2\theta}} E_\phi$$

and (5-2)

$$E_p = \frac{a}{\sqrt{a^2 + \sin^2\theta}} E_r + \frac{\sin\theta}{\sqrt{a^2 + \sin^2\theta}} E_\phi$$

The s component of the field is "across" the gap, and the p component is "along" the gap.

The fields in the gap are illustrated in Fig. 5. As the antenna arms are made of thin sheets of conducting material, the thickness of the arms $\Delta\theta$ is assumed arbitrarily small, but not zero. As the gap width $\Delta\tau$ approaches zero, E_p evaluated in the gap must approach zero. The field vectors satisfy Maxwell's equations and the well known conditions at the boundary surface between different media[20]. E_p is

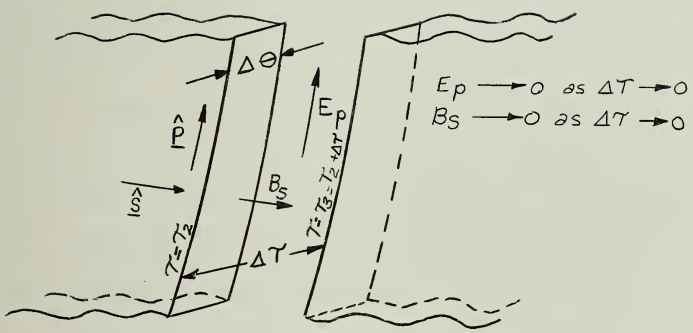

FIGURE 5 ELECTRIC AND MAGNETIC FIELDS IN A NARROW GAP

zero inside the metal arms, and since the tangential components of $\underline{E}$ are continuous across a boundary surface, E_p is zero just inside either edge of the gap at the points $\tau = \tau_2^+$ and $\tau = \tau_3^-$. If E_p evaluated in the gap did not approach zero as $\Delta\tau \longrightarrow 0$, E_p would be discontinuous with respect to τ between $\tau = \tau_2^+$ and $\tau = \tau_3^-$. However, this discontinuity in E_p is not allowable as the media is uniform between $\tau = \tau_2^+$ and τ_3^-. When the gaps are made small the determination of the tangential electric fields on the cone $\theta = \theta_o$ is simplified as the p component approaches zero, and only the s component need be found.

As the gaps are made small, E_s evaluated on the cone $\theta = \theta_o$ is zero for all values of u and τ except $\tau = 0, \pi a$ where it becomes infinite. The integral of E·dl across the gap represents a voltage and must be finite. Therefore, when the gaps are small an approximation for the tangential electric fields on the cone $\theta = \theta_o$ is

$$E_s\big]_{\theta=\theta_o} = F(u)\left[\delta(\tau-0) - \delta(\tau-\pi a)\right]$$

$$E_p\big]_{\theta=\theta_o} = 0 \quad . \tag{5-3}$$

$\delta(\tau-\tau_o)$ represents the Dirac delta "function" defined as

$$\begin{aligned} \delta(\tau-\tau_o) &= 0 \qquad \tau \neq \tau_o \\ \delta(\tau-\tau_o) &= \infty \qquad \tau = \tau_o \\ \int_{\tau_o-\epsilon}^{\tau_o+\epsilon} \delta(\tau-\tau_o)\,d\tau &= 1 \end{aligned} \tag{5-4}$$

and F(u) is an arbitrary function of u still to be determined.

The voltage V(u) across the gap is given by

$$V(u) = \int_{\text{across gap}}^{\rho} E \cdot dl \qquad (5\text{-}5)$$

Integrating Eq. 5-5 relates V(u) and F(u) by

$$\beta\, V(u) = \frac{u\, F(u)}{\sqrt{a^2 + \sin^2 \theta_o}} \qquad (5\text{-}6)$$

Since the antenna is balanced the voltage distribution V(u) will be the same for both gaps, and $\lim_{u \to 0} V(u)$ gives the input voltage exciting the antenna. By restricting the gap width to be very small, the problem of finding all of the fields produced by the spiral antenna has been reduced to finding the voltage along the gap.

5.2 Expressions for $C'^{m}_{n+j\frac{m}{a}}$ and $C''^{m}_{n+j\frac{m}{a}}$

To have the antenna excited at the origin by a finite voltage, $\lim_{u \to 0} V(u)$ must be finite. Since V(u) represents the physical voltage obtained, it is reasonable to assume that V(u) is continuous and has continuous derivatives for all values of u, and can be expanded in the power series

$$\beta\, V(u) = \sum_{p=0}^{\infty}{}' b_p u^p \quad . \qquad (5\text{-}7)$$

It is assumed that this series converges for all values of u, and that the series derived using it also converge. The coefficients $C'^{m}_{n+j\frac{m}{a}}$ and $C''^{m}_{n+j\frac{m}{a}}$ of Section 4 may be expressed in terms of the coefficients b_p, and, therefore, all of the fields expressed in terms of a single set of unknown coefficients. The substitution of Eqs. 5-3, 5-6, and 5-7 into Eq. 4-30 gives an expression for $C''^{m}_{n+j\frac{m}{a}}$ as

for m even

$$C''^{m}_{n+j\frac{m}{a}} = 0$$

(5-8)

for m odd, n = 0,1,2,3,...

$$C''^{m}_{n+j\frac{m}{a}} = \frac{\sin\Theta_o}{\pi a}\,(2)^{n+\frac{1}{2}+j\frac{m}{a}}\,\Gamma(n+\tfrac{1}{2}+j\tfrac{m}{a}) \sum_{p=0}^{\leq\frac{1}{2}n} \frac{\Gamma(n-p+\frac{1}{2}+j\frac{m}{a})}{p!\,(2)^{2p}}\, b_{n-2p}.$$

Substituting into 4-49 gives $C'^{m}_{n+j\frac{m}{a}}$ as

for m even

$$C'^{m}_{n+j\frac{m}{a}} = 0$$

for m odd, n = -1

$$C'^{m}_{-1+j\frac{m}{a}} = 0$$

(5-9)

for m odd, n = 0,1,2,3,...

$$C'^{m}_{n+j\frac{m}{a}} = \frac{(-)\,(2)^{n+\frac{1}{2}+j\frac{m}{a}}\,\Gamma(n+\frac{1}{2}+j\frac{m}{a})}{\pi(n+1+j\frac{m}{a})\,(n+j\frac{m}{a})} \sum_{p=0}^{\leq\frac{1}{2}(n+1)} \frac{\Gamma(n-p+\frac{1}{2}+j\frac{m}{a})}{p!\,(2)^{2p}} \left[n(n+1)+j\frac{m}{a}(n+2p+1)\right] b_{n+1-2p}$$

One aspect in the derivation of the preceding equations should be considered here. If $f_m(u)$ is derived from Eq. 4-33, it is

$$f_m(u) = \frac{\sin\Theta_o}{\pi a\sqrt{a^2 + \sin^2\Theta}}\,F(u) \qquad m \text{ odd}$$

$$f_m(u) = 0 \qquad m \text{ even} \tag{5-9}$$

which combined with Eq. 4-12 expresses the variation in electric field intensity along the gap F(u) as

$$F(u) = \frac{\pi a\sqrt{a^2 + \sin^2\Theta_o}}{\sin\Theta_o} \sum_{n=0}^{\infty} C''^{m}_{n+j\frac{m}{a}}\, u^{-\frac{3}{2}-j\frac{m}{a}}\, J^{(u)}_{n+\frac{1}{2}+j\frac{m}{a}} \tag{5-10}$$

F(u) does not depend on the method used in solving the problem; that is, F(u) must be independent of m and n. For any one value of n, $u^{-j\frac{m}{a}}\, J^{(u)}_{n+\frac{1}{2}+j\frac{m}{a}}$ is not independent of m, and the series must be summed

over many values of n to obtain a solution. If only one value of n could be used to represent a solution, the operation of the antenna could be described in terms of "modes" existing on the structure, and it would only be necessary to determine what "mode" is excited by a source at the origin. Unfortunately, the summation over n must be made, and F(u) does not seem to have a simple mathematical form.

5.3 The Continuity of Tangential $\underline{H}$ from Regions I and II

If the voltage along the gap $V'(u)$ is to correspond to that produced by a source at the origin, it is restricted by the condition that the components of $\underline{H}$ tangential to the cone $\theta = \theta_o$ must be continuous as the gap is crossed from Region I to Region II. Referring again to Fig. 5, the s component of $\underline{H}$ must approach zero as the gap width is made small. In terms of the magnetic flux density $\underline{B}$ given by $\underline{B} = \mu\underline{H}$, any time-varying component of B_s is zero in the conducting arm. The normal component of $\underline{B}$ is continuous across a surface, so B_s is zero just inside the gap at the points $\tau = \tau_2^+$ and $\tau = \tau_3^-$. If B_s in the gap did not approach zero as $\Delta\tau \longrightarrow 0$, B_s would be discontinuous in a continuous media. Therefore, $B_s \longrightarrow 0$ as $\Delta\tau \longrightarrow 0$, and H_s in the gap approaches zero as the gap is made narrow. To insure continuity of the tangential components of $\underline{H}$ in the gap the relation to be enforced is

$$H_{p\text{I}}\Big]_{\text{gap}} = H_{p\text{II}}\Big]_{\text{gap}} \tag{5-11}$$

where the subscripts I and II refer to the field evaluated from $\theta < \theta_o$ and $\theta > \theta_o$, respectively. The magnetic fields in the two gaps are the same except for sign, so it is sufficient to enforce Eq. 5-11 only at the gap at $\tau = 0$.

In Appendix B expressions for H_p evaluated at the gap are derived in terms of the coefficients b_p of the power series expansion for $V(u)$. It is shown there that for Eq. 5-11 to be satisfied for all values of u except $u = 0$, $u = \infty$, the b_p coefficients must be related as follows:

for $p = 1,2,3,\ldots$

(5-12)

$$b_{2p} = \frac{\displaystyle\sum_{\substack{m=-\infty \\ m \text{ odd}}}^{\infty} \left\{ \frac{\sin^2\theta_o}{a^2} \sum_{n=0}^{p-1} \frac{(-1)^{n+1}(2)^{2n+1}\left(2n+\frac{1}{2}+j\frac{m}{a}\right)}{(p-n-1)!\left(2n+j\frac{m}{a}\right)\left(2n+1+j\frac{m}{a}\right)\Gamma\left(p+n+\frac{1}{2}+j\frac{m}{a}\right)} [M_n''] \mathcal{P}^m_{2n+j\frac{m}{a}}(\cos\theta_o) \right.}{\left. + \displaystyle\sum_{n=1}^{p-1} \frac{(-1)^{n+1}(2)^{2n-1}\left(2n-\frac{1}{2}+j\frac{m}{a}\right)\left[(2n-1)(2n)+j\frac{m}{a}(4n-2p-1)\right]}{(p-n)!\left(2n+j\frac{m}{a}\right)\left(2n-1+j\frac{m}{a}\right)\Gamma\left(p+n+\frac{1}{2}+j\frac{m}{a}\right)} [M_n'] \mathcal{P}^m_{2n-1+j\frac{m}{a}}(\cos\theta_o) \right\}}{\displaystyle\sum_{\substack{m=-\infty \\ m \text{ odd}}}^{\infty} (-)^p (2)^{2p-1} (2p-1)(2p) \mathcal{P}^m_{2p-1+j\frac{m}{a}}(\cos\theta_o)}$$

(5-13)

$$b_{2p+1} = \frac{\displaystyle\sum_{\substack{m=-\infty \\ m \text{ odd}}}^{\infty} \left\{ \frac{\sin^2\theta_o}{a^2} \sum_{n=0}^{p-1} \frac{(-1)^{n+1}(2)^{2n+2}\left(2n+\frac{3}{2}+j\frac{m}{a}\right)}{(p-n-1)!\left(2n+1+j\frac{m}{a}\right)\left(2n+2+j\frac{m}{a}\right)\Gamma\left(p+n+\frac{3}{2}+j\frac{m}{a}\right)} [N_n''] \mathcal{P}^m_{2n+1+j\frac{m}{a}}(\cos\theta_o) \right.}{\left. + \displaystyle\sum_{n=0}^{p} \frac{(-1)^{n+1}(2)^{2n}\left(2n+\frac{1}{2}+j\frac{m}{a}\right)\left[2n(2n+1)+j\frac{m}{a}2(2n-p)\right]}{(p-n)!\left(2n+1+j\frac{m}{a}\right)\left(2n+j\frac{m}{a}\right)\Gamma\left(p+n+\frac{3}{2}+j\frac{m}{a}\right)} [N_n'] \mathcal{P}^m_{2n+j\frac{m}{a}}(\cos\theta_o) \right\}}{\displaystyle\sum_{\substack{m=-\infty \\ m \text{ odd}}}^{\infty} (-)^p (2)^{2p} (2p)(2p+1) \mathcal{P}^m_{2p+j\frac{m}{a}}(\cos\theta_o)}$$

where

$$\mathcal{P}^{m}_{n+j\frac{m}{a}}(\cos\theta_o) = \frac{P^{m}_{n+j\frac{m}{a}}(\cos\theta_o)}{\dfrac{d\,P^{m}_{n+j\frac{m}{a}}(\cos\theta_o)}{d\theta}} - \frac{P^{m}_{n+j\frac{m}{a}}(-\cos\theta_o)}{\dfrac{d\,P^{m}_{n+j\frac{m}{a}}(-\cos\theta_o)}{d\theta}}$$

$$\mathcal{Q}^{m}_{n+j\frac{m}{a}}(\cos\theta_o) = \frac{\dfrac{d\,P^{m}_{n+j\frac{m}{a}}(\cos\theta_o)}{d\theta}}{P^{m}_{n+j\frac{m}{a}}(\cos\theta_o)} - \frac{\dfrac{d\,P^{m}_{n+j\frac{m}{a}}(-\cos\theta_o)}{d\theta}}{P^{m}_{n+j\frac{m}{a}}(-\cos\theta_o)}$$

$$\frac{d\,P^{m}_{n+j\frac{m}{a}}(\cos\theta_o)}{d\theta} \quad \text{stands for} \quad \left.\frac{dP^{m}_{n+j\frac{m}{a}}(\cos\theta)}{d\theta}\right]_{\theta=\theta_o}$$

$$M''_n = \sum_{k=0}^{n} \frac{\Gamma(2n-2k+\frac{1}{2}+j\frac{m}{a})}{k!\,(2)^{2k}}\, b_{2(n-k)}$$

$$M'_n = \sum_{k=0}^{n} \frac{\Gamma(2n-k-\frac{1}{2}+j\frac{m}{a})}{k!\,(2)^{2k}} \left[(2n-1)(2n)+j\tfrac{m}{a}2(n+k)\right] b_{2(n-k)} \qquad \text{for } n \neq p$$

$$M'_n = \sum_{k=1}^{p} \frac{\Gamma(2p-k-\frac{1}{2}+j\frac{m}{a})}{k!\,(2)^{2k}} \left[(2p-1)(2p)+j\tfrac{m}{a}\,2(p+k)\right] b_{2(p-k)} \qquad \text{for } n = p$$

$$N''_n = \sum_{k=0}^{n} \frac{\Gamma(2n-k+\frac{3}{2}+j\frac{m}{a})}{k!\,(2)^{2k}}\, b_{2(n-k)+1}$$

$$N'_n = \sum_{k=0}^{n} \frac{\Gamma(2n-k+\frac{1}{2}+j\frac{m}{a})}{k!\,(2)^{2k}} \left[2n(2n+1)+j\tfrac{m}{a}(2n+2k+1)\right] b_{2(n-k)+1} \qquad \text{for } n \neq p$$

$$N'_n = \sum_{k=1}^{p} \frac{\Gamma(2p-k+\frac{1}{2}+j\frac{m}{a})}{k!\,(2)^{2k}} \left[2p(2p+1)+j\tfrac{m}{a}(2p+2k+1)\right] b_{2(p-k)+1} \qquad \text{for } n = p$$

Eq. 5-12 expresses b_2 in terms of b_o; b_4 in terms of b_2 and b_o; b_6 in terms of b_4, b_2, and b_o; etc. Eq. (5-13) expresses b_3 in terms of b_1; b_5 in terms of b_3, and b_1; etc. Therefore, all of the coefficients in the power series expansion are expressed in terms of b_o and b_1.

Since b_o is proportional to the input voltage, the coefficient b_1 is the only one still to be determined.

5.4 The Far Fields and the Radiation Condition

The relation between b_o and b_1 must be such that the radiation condition[21] is satisfied. This condition insures that the antenna is a source of energy, and for a finite antenna requires that the fields at large distances from the antenna be represented by divergent traveling waves. Making use of the relations

$$u^{-j\frac{m}{a}} e^{-j\frac{m}{a}\tau} = e^{-jm(\phi + \frac{\ell n\, \beta}{a})} \tag{5-14}$$

and $$\lim_{r\to\infty} (\beta r)^{\frac{1}{2}} J_{n+\frac{1}{2}+j\frac{m}{a}}(\beta r) = (\frac{2}{\pi})^{\frac{1}{2}} \cos\left[\beta r - \tfrac{1}{2}\pi(n+1+j\tfrac{m}{a})\right] \tag{5-15}$$

the electric fields for large values of r are given by Eqs. 5-16, 5-17, and 5-18. The magnitude of E_r varies as $\frac{1}{r^2}$ for large r, and thus becomes insignificant. As the antenna considered here is infinite in extent it is not possible to be a large distance from it. However, since only the relation between b_o and b_1 is desired, it can be obtained by requiring a wave traveling away from the origin in one direction. The most convenient direction to choose is $\theta = \theta_o$ as

$$\lim_{\theta\to 0} \frac{P^m_{n+j\frac{m}{a}}(\cos\theta)}{\sin\theta} = 0 \quad \text{for all m except } m = \pm 1$$

and $$\left.\frac{d\, P^m_{n+j\frac{m}{a}}(\cos\theta)}{d\theta}\right]_{\theta=0} = 0 \quad \text{for all m except } m = \pm 1,$$

and the summation with respect to m becomes trivial.

$$\lim_{r\to\infty} E_r = \left(\frac{2}{\pi}\right)^{\frac{1}{2}} \frac{\cos \beta r}{(\beta r)^2} \sum_{m=-\infty}^{\infty} \sum_{n=0}^{\infty} C''^{m}_{n+j\frac{m}{a}} \cos\left[\tfrac{1}{2}\pi(n+1+j\tfrac{m}{a})\right] \frac{P^{m}_{n+j\frac{m}{a}}(\cos\theta)}{P^{m}_{n+j\frac{m}{a}}(\cos\theta_o)} e^{-jm(\phi + \frac{\ell n\beta}{a})}$$

$$+ \left(\frac{2}{\pi}\right)^{\frac{1}{2}} \frac{\sin \beta r}{(\beta r)^2} \sum_{m=-\infty}^{\infty} \sum_{n=0}^{\infty} C''^{m}_{n+j\frac{m}{a}} \sin\left[\tfrac{1}{2}\pi(n+1+j\tfrac{m}{a})\right] \frac{P^{m}_{n+j\frac{m}{a}}(\cos\theta)}{P^{m}_{n+j\frac{m}{a}}(\cos\theta_o)} e^{-jm(\phi + \frac{\ell n\beta}{a})} \qquad (5\text{-}16)$$

$$\lim_{r\to\infty} E_\theta = \left(\frac{2}{\pi}\right)^{\frac{1}{2}} \frac{\cos \beta r}{(\beta r)} \sum_{m=-\infty}^{\infty} \sum_{n=0}^{\infty} \left\{ \frac{C''^{m}_{n+j\frac{m}{a}} \cos\left[\tfrac{1}{2}\pi(n+j\tfrac{m}{a})\right]}{(n+j\frac{m}{a})(n+1+j\frac{m}{a})} \frac{\frac{d}{d\theta} P^{m}_{n+j\frac{m}{a}}(\cos\theta)}{P^{m}_{n+j\frac{m}{a}}(\cos\theta_o)} + \frac{jm\, C'^{m}_{n+j\frac{m}{a}} \cos\left[\tfrac{1}{2}\pi(n+1+j\tfrac{m}{a})\right] P^{m}_{n+j\frac{m}{a}}(\cos\theta)}{\sin\theta \; \frac{d}{d\theta} P^{m}_{n+j\frac{m}{a}}(\cos\theta_o)} \right\} e^{-jm(\phi + \frac{\ell n\beta}{a})}$$

$$+ \left(\frac{2}{\pi}\right)^{\frac{1}{2}} \frac{\sin \beta r}{(\beta r)} \sum_{m=-\infty}^{\infty} \sum_{n=0}^{\infty} \left\{ \frac{C''^{m}_{n+j\frac{m}{a}} \sin\left[\tfrac{1}{2}\pi(n+j\tfrac{m}{a})\right]}{(n+j\frac{m}{a})(n+1+j\frac{m}{a})} \frac{\frac{d}{d\theta} P^{m}_{n+j\frac{m}{a}}(\cos\theta)}{P^{m}_{n+j\frac{m}{a}}(\cos\theta_o)} + \frac{jm\, C'^{m}_{n+j\frac{m}{a}} \sin\left[\tfrac{1}{2}\pi(n+1+j\tfrac{m}{a})\right] P^{m}_{n+j\frac{m}{a}}(\cos\theta)}{\sin\theta \; \frac{d}{d\theta} P^{m}_{n+j\frac{m}{a}}(\cos\theta_o)} \right\} e^{-jm(\phi + \frac{\ell n\beta}{a})} \qquad (5\text{-}17)$$

$$\lim_{r\to\infty} E_\phi = \left(\frac{2}{\pi}\right)^{\frac{1}{2}} \frac{\cos \beta r}{(\beta r)} \sum_{m=-\infty}^{\infty} \sum_{n=0}^{\infty} \left\{ \frac{(-jm) C''^{m}_{n+j\frac{m}{a}} \cos\left[\tfrac{1}{2}\pi(n+j\tfrac{m}{a})\right]}{\sin\theta (n+j\frac{m}{a})(n+1+j\frac{m}{a})} \frac{P^{m}_{n+j\frac{m}{a}}(\cos\theta)}{P^{m}_{n+j\frac{m}{a}}(\cos\theta_o)} + C'^{m}_{n+j\frac{m}{a}} \cos\left[\tfrac{1}{2}\pi(n+1+j\tfrac{m}{a})\right] \frac{\frac{d}{d\theta} P^{m}_{n+j\frac{m}{a}}(\cos\theta)}{\frac{d}{d\theta} P^{m}_{n+j\frac{m}{a}}(\cos\theta_o)} \right\} e^{-jm(\phi + \frac{\ell n\beta}{a})}$$

$$+ \left(\frac{2}{\pi}\right)^{\frac{1}{2}} \frac{\sin \beta r}{(\beta r)} \sum_{m=-\infty}^{\infty} \sum_{n=0}^{\infty} \left\{ \frac{(-jm) C''^{m}_{n+j\frac{m}{a}} \sin\left[\tfrac{1}{2}\pi(n+j\tfrac{m}{a})\right]}{\sin\theta (n+j\frac{m}{a})(n+1+j\frac{m}{a})} \frac{P^{m}_{n+j\frac{m}{a}}(\cos\theta)}{P^{m}_{n+j\frac{m}{a}}(\cos\theta_o)} + C'^{m}_{n+j\frac{m}{a}} \sin\left[\tfrac{1}{2}\pi(n+1+j\tfrac{m}{a})\right] \frac{\frac{d}{d\theta} P^{m}_{n+j\frac{m}{a}}(\cos\theta)}{\frac{d}{d\theta} P^{m}_{n+j\frac{m}{a}}(\cos\theta_o)} \right\} e^{-jm(\phi + \frac{\ell n\beta}{a})} \qquad (5\text{-}18)$$

Using the $e^{j\omega t}$ time convention a wave traveling away from the origin varies as $\frac{1}{r} e^{-j\beta r}$. Making use of the fact that many terms from m = 1 and m = - 1 are related as complex conjugates, $E_\theta]_{\theta=0}$ and $E_\phi]_{\theta=0}$ in Eqs. 5-17 and 5-18 will have this r variation for all values of ϕ if

$$\sum_{n=0}^{\infty} e^{-\frac{jn\pi}{2}} \left\{ \frac{C''^{1}_{n+\frac{j}{a}}}{P^{1}_{n+\frac{j}{a}}(\cos\theta_o)} + \frac{(n+1+\frac{j}{a})(n+\frac{j}{a})\, C'^{1}_{n+\frac{j}{a}}}{\frac{d\, P^{1}_{n+\frac{j}{a}}(\cos\theta_o)}{d\theta}} \right\} = 0 \qquad (5\text{-}19)$$

Substituting for $C''^{1}_{n+\frac{j}{a}}$ and $C'^{1}_{n+j\frac{1}{a}}$ from Eqs. 5-8 and 5-9, and letting

$$\bar{M}''_n = \sum_{k=0}^{n} \frac{\Gamma(2n-k+\frac{1}{2}+\frac{j}{a})}{k!(2)^{2k}}\, b_{2(n-k)}$$

$$\bar{M}'_n = \sum_{k=0}^{n} \frac{\Gamma(2n-k-\frac{1}{2}+\frac{j}{a})}{k!(2)^{2k}} \left[2n(2n-1)+\frac{j}{a}\, 2(n+k) \right] b_{2(n-k)}$$

$$\bar{N}''_n = \sum_{k=0}^{n} \frac{\Gamma(2n-k+\frac{3}{2}+\frac{j}{a})}{k!(2)^{2k}}\, b_{2(n-k)+1}$$

$$\bar{N}'_n = \sum_{k=0}^{n} \frac{\Gamma(2n-k+\frac{1}{2}+\frac{j}{a})}{k!(2)^{2k}} \left[2n(2n+1)+\frac{j}{a}(2n+2k+1) \right] b_{2(n-k)+1}$$

Eq 5-19 becomes

$$\sum_{n=0}^{\infty}\left\{\frac{(-1)^n(2)^{2n}(2n+\frac{1}{2}+\frac{j}{a})\sin\theta_o}{a\,P^1_{2n+\frac{j}{a}}(\cos\theta_o)}\left[\bar{M}''_n\right]+j\frac{(-1)^n(2)^{2n+1}(2n+\frac{3}{2}+\frac{j}{a})}{\dfrac{d\,P^1_{2n+1+\frac{j}{a}}(\cos\theta_o)}{d\theta}}\left[\bar{M}'_{n+1}\right]\right\}$$

$$=\sum_{n=0}^{\infty}\left\{\frac{(-1)^n(2)^{2n}(2n+\frac{1}{2}+\frac{j}{a})}{\dfrac{d\,P^1_{2n+\frac{j}{a}}(\cos\theta_o)}{d\theta}}\left[\bar{N}'_n\right]+j\frac{(-1)^n(2)^{2n+1}(2n+\frac{3}{2}+\frac{j}{a})\sin\theta_o}{a\,P^1_{2n+1+\frac{j}{a}}(\cos\theta_o)}\left[\bar{N}''_n\right]\right\} \tag{5-20}$$

The LHS of Eq. 5-20 is proportional to b_o, and the RHS is proportional to b_1. Therefore, it gives the relation between b_o and b_1 required for waves traveling from the origin for large r along the $\theta = 0$ axis. Eq. 5-20 is a convenient form for this relation as $\bar{M}''_n$, $\bar{M}'_n$, $\bar{N}''_n$, and $\bar{N}'_n$ are needed in Eq. 5-12 and 5-13 for the calculation of the b_p coefficients.

5.5 The Input Admittance

The input voltage V(0) can be obtained by taking the limit of V(u) as $u\to 0$, and using Eq. 5-7

$$V(0) = \lim_{u\to 0} V(u) = \frac{b_o}{\beta} \tag{5-21}$$

The input current I(0) can be determined by integrating $\underline{H}\cdot d\underline{l}$ around one of the arms and taking the limit as $u\to 0$. Using Eq. 4-30, 4-41, 4-8, and 5-2, an expression for the input admittance Y(0) can be derived as

$$Y(0) = \frac{I(0)}{V(0)} = \frac{j}{\eta}\frac{b_o}{b_1\sin\theta_o}\sum_{\substack{m=-\infty\\ \text{modd}}}^{\infty}\left\{\frac{(-1)^m P^m_{j\frac{m}{a}}(\cos\theta_o)}{\dfrac{d\,P^m_{j\frac{m}{a}}(\cos\theta_o)}{d\theta}}-\frac{(-1)^m P^m_{j\frac{m}{a}}(-\cos\theta_o)}{\dfrac{d\,P^m_{j\frac{m}{a}}(+\cos\theta_o)}{d\theta}}\right\} \tag{5-22}$$

5.6 The Problem of Numerical Calculation

To be completely satisfying from an engineering viewpoint, the rather complex mathematical expressions derived for the equiangular spiral antenna must be evaluated for various parameters of the structure. The fact that the expressions obtained are in series form makes them well adapted for computation using a digital computer. It is presently planned by the Antenna Laboratory of the University of Illinois to program the high-speed digital computer, ILLIAC, to make numerical calculations using the expressions derived here. Appropriate tables of the gamma function of complex argument are available,[20] but no tables of complex order Bessel functions or complex degree associated Legendre functions are known. The series converge most rapidly with respect to n when r is small. In the limit as $r \rightarrow 0$ only the $n = 0$ terms are needed, and the electric fields approach those given by the static solutions. This fact makes the near fields, including the current distribution on the antenna arms, the easiest to calculate. It will probably be better to use the conventional methods of obtaining the far fields for a known current distribution than to use the series developed here.

6. CONCLUSIONS

Theoretical expressions for the fields produced by an infinite equiangular spiral structure have been obtained. It has been demonstrated that the static electric fields are a function of only two variables s and θ. For the static case exact expressions have been derived for the structure with narrow gaps, and approximate expressions using the "least squares" criterion for arbitrary gaps.

For the electromagnetic problem, solutions of the vector Helmholtz equation suitable for the spiral geometry have been obtained by using the separation of variables technique in an oblique coordinate system. These solutions express all of the electromagnetic fields in terms of the tangential electric fields existing in the gaps of an equiangular spiral antenna.

For the special case of the balanced antenna with narrow gaps between the arms, exact expressions for the fields in the gaps are derived. These solutions make available a means of calculating the input impedance, the current distribution, and the pattern of an equiangular spiral antenna.

BIBLIOGRAPHY

1. Rumsey, V.H. "Frequency Independent Antennas," IRE National Convention Record, Vol. 5, Part 1 - Antennas and Propagation; Microwave Theory and Techniques, 1957, p. 114-118.

2. Schelkunoff, S.A. Advanced Antenna Theory, John Wiley and Sons, 1952.

3. Carrel, R.L. "The Characteristic Impedance of Two Infinite Cones of Arbitrary Cross Section," IRE Transactions on Antennas and Propagation, Vol. AP-6, No. 2, April, 1958, p. 197-201.

4. Dyson, J.D. "The Equiangular Spiral Antenna," Antenna Laboratory Technical Report No. 21, Contract No. AF 33(616)-3220, University of Illinois, Urbana, Illinois, 15 September 1957.

5. Dyson, J.D. "A Unidirectional Equiangular Spiral Antenna," Antenna Laboratory Technical Report No. 33, Project No. AF 33(616)-3220, University of Illinois, Urbana, Illinois, 10 July 1958.

6. Stratton, J.A. Electromagnetic Theory, McGraw-Hill Book Company, Inc., 1941, p.52.

7. Hobson, E.W. The Theory of Spherical and Ellipsoidal Harmonics, Cambridge, 1931, p. 178-292.

8. Snow, C. Hypergeometric and Legendre Functions, National Bureau of Standards Applied Mathematics Series 19, United States Government Printing Office, Washington, 1952, p. 33-86.

9. Schelkunoff, S.A. Applied Mathematics for Engineers and Scientists, D. Van Nostrand Company, Inc.. Third Printing, 1955, p. 417-434.

10. Whittaker, E.T., and Watson, G.N. A Course of Modern Analysis, Cambridge Fourth Edition, 1952, p. 235-264.

11. Smythe, W.R. Static and Dynamic Electricity, McGraw-Hill Book Company, Inc. Second Edition, 1950, p. 78-94.

12. Ibid., p. 89-91.

13. Sommerfeld,A. Partial Differential Equations in Physics, Academic Press, Inc., 1949 p. 2, 29-31, 159-164.

14. Stratton, J.A. op. cit., p. 50, 52.

15. Jahnke, E. and Emde, F. Tables of Functions, Dover Publications, Fourth Edition, 1945, p. 146.

16. Watson, G.N. Theory of Bessel Functions, Cambridge 1952, Second Edition.

UNIVERSITY OF ILLINOIS
LIBRARY

BIBLIOGRAPHY (CONTINUED)

17. Ibid., p. 40.

18. Ibid., p. 522-525.

19. Ibid., p. 283-284.

20. Jordan, E.C., Electromagnetic Waves and Radiating Systems, Prentice-Hall, Inc., 1950, p. 104-110.

21. Stratton, J.A. op. cit., p. 485-486.

APPENDIX A

If the potential on the cone $\Theta = \Theta_o$ is real, the solutions for the potential in Section 3 are real for all values of Θ and τ. This may be shown by first combining Eq. 3-15 and 3-18 for $\Theta \leq \Theta_o$ to obtain

$$V(\Theta,\tau) = \sum_{m=-\infty}^{\infty} C_m \frac{P^m_{j\frac{m}{a}}(\cos\Theta)}{P^m_{j\frac{m}{a}}(\cos\Theta_o)} e^{j\frac{m}{a}\tau} \qquad \text{(A-1)}$$

From Eq. 3-17

$$C_m = \frac{1}{2\pi a} \int_{\tau_1}^{\tau_1+2\pi a} V(\Theta_o,\tau)\, e^{-j\frac{m}{a}\tau}\, d\tau \qquad \text{(3-17)}$$

$C_m = (C_{-m})^*$, and C_o is real if $V(\Theta_o,\tau)$ is real. By Eq. 3-11, 3-12, and 3-13, $P_o^o(\cos\Theta) = 1$

and

$$\frac{P^m_{j\frac{m}{a}}(\cos\Theta)}{P^m_{j\frac{m}{a}}(\cos\Theta_o)} = \left[\frac{P^{-m}_{-j\frac{m}{a}}(\cos\Theta)}{P^{-m}_{-j\frac{m}{a}}(\cos\Theta_o)}\right]^* \qquad \text{(A-2)}$$

Therefore, in Eq A-1 the m = 0 term is real; for other values of m the + m and - m terms are complex conjugates for all values of Θ and τ. This assures that the potentials obtained from Eq. A-3 or Eq. 3-24 are real for all values of Θ and τ.

APPENDIX B

DERIVATION OF THE b_p COEFFICIENTS

The relations between the coefficients b_p of the power series expansion for the voltage along the gap are determined by requiring that the p components of the magnetic field at the gap from regions I and II are equal. By Eq. 5-2 H_p is related to H_r and H_ϕ by

$$H_p = \frac{a}{\sqrt{a^2 + \sin^2\theta}} H_r + \frac{\sin\theta}{\sqrt{a^2 + \sin^2\theta}} H_\phi . \tag{B-1}$$

Using Eqs. 4-30, 4-48, and 4-49, H_p in region I is

$$j\eta\sqrt{a^2 + \sin^2\theta}\, H_p = \frac{a}{u}\sum_{m=-\infty}^{\infty}\sum_{n=0}^{\infty}\left[C^{1m}_{n+j\frac{m}{a}}\, u^{\frac{1}{2}}\, u^{-j\frac{m}{a}}\left[\frac{(n+j\frac{m}{a})(n+1+j2\frac{m}{a})}{u} J^{(u)}_{n+\frac{1}{2}+j\frac{m}{a}} - \right.\right.$$

$$\left.\left. - (j\tfrac{m}{a})\, J^{(u)}_{n-\frac{1}{2}+j\frac{m}{a}}\right] \frac{P^m_{n+j\frac{m}{a}}(\cos\theta)}{\dfrac{d\,P^m_{n+j\frac{m}{a}}(\cos\theta_o)}{d\,\theta}} e^{j\frac{m}{a}\tau}\right]$$

$$+ \frac{\sin\theta}{u}\sum_{m=-\infty}^{\infty}\sum_{n=0}^{\infty}\left[\frac{C^{1m}_{n+j\frac{m}{a}}\, u^{\frac{1}{2}}\, u^{-j\frac{m}{a}}\, J^{(u)}_{n+\frac{1}{2}+j\frac{m}{a}}}{(n+j\frac{m}{a})(n+1+j\frac{m}{a})} \frac{\dfrac{d\,P^m_{n+j\frac{m}{a}}(\cos\theta)}{d\,\theta}}{P^m_{n+j\frac{m}{a}}(\cos\theta_o)} e^{j\frac{m}{a}\tau}\right]. \tag{B-2}$$

The expression for H_p in region II is similar.

Let

$$\mathcal{P}^m_{n+j\frac{m}{a}}(\cos\theta_o) = \frac{P^m_{n+j\frac{m}{a}}(\cos\theta_o)}{\dfrac{d\,P^m_{n+j\frac{m}{a}}(\cos\theta_o)}{d\,\theta}} - \frac{P^m_{n+j\frac{m}{a}}(-\cos\theta_o)}{\dfrac{d\,P^m_{n+j\frac{m}{a}}(-\cos\theta_o)}{d\,\theta}} \tag{B-3}$$

$$\mathcal{Q}^{m}_{n+j\frac{m}{a}}(\cos\theta_o) = \frac{\frac{d\,P^{m}_{n+j\frac{m}{a}}(\cos\theta_o)}{d\theta}}{P^{m}_{n+j\frac{m}{a}}(\cos\theta_o)} - \frac{\frac{d\,P^{m}_{n+j\frac{m}{a}}(-\cos\theta_o)}{d\theta}}{P^{m}_{n+j\frac{m}{a}}(-\cos\theta_o)} \qquad \text{(B-3) (Cont.)}$$

Equating, H_p evaluated at $\tau = 0$, $\theta = \theta_o$ from regions I and II gives

$$\frac{a}{u}\sum_{m=-\infty}^{\infty}\sum_{n=0}^{\infty} C^{m}_{n+j\frac{m}{a}}\, u^{\frac{1}{2}}\, u^{-j\frac{m}{a}}\left[\frac{(n+j\frac{m}{a})(n+1+j2\frac{m}{a})}{u}\, J^{(u)}_{n+\frac{1}{2}+j\frac{m}{a}} - (j\tfrac{m}{a})\, J^{(u)}_{n-\frac{1}{2}+j\frac{m}{a}}\right] P^{m}_{n+j\frac{m}{a}}(\cos\theta_o)$$

$$+\frac{\sin\theta_o}{u}\sum_{m=-\infty}^{\infty}\sum_{m=-\infty}^{\infty}\frac{C^{m}_{n+j\frac{m}{a}}\, u^{\frac{1}{2}}\, u^{-j\frac{m}{a}}\, J^{(u)}_{n+\frac{1}{2}+j\frac{m}{a}}}{(n+j\frac{m}{a})(n+1+j\frac{m}{a})}\, \mathcal{Q}^{m}_{n+j\frac{m}{a}}(\cos\theta_o) = 0 \qquad \text{(B-4)}$$

If Eq. B-4 is to be satisfied for all u except u = 0, ∞, the coefficients of each power of u must be zero. Expanding the Bessel functions in a power series gives

$$\frac{a}{u}\sum_{m=-\infty}^{\infty}\sum_{n=0}^{\infty}\sum_{k=0}^{\infty}\left[\frac{(-1)^k\left[n(n+1)+j\frac{m}{a}(n-2k)\right]u^{n+2k}}{k!\,(2)^{n+2k+\frac{1}{2}+j\frac{m}{a}}\,\Gamma(n+k+\frac{3}{2}+j\frac{m}{a})}\, C^{m}_{n+j\frac{m}{a}}\, P^{m}_{n+j\frac{m}{a}}(\cos\theta_o)\right]$$

(B-5)

$$+\frac{\sin\theta_o}{u}\sum_{m=-\infty}^{\infty}\sum_{n=1}^{\infty}\sum_{k=0}^{\infty}\left[\frac{(-1)^k\,(u)^{n+2k}}{k!\,(2)^{n+2k-\frac{1}{2}+j\frac{m}{a}}\,(n-1+j\frac{m}{a})(n+j\frac{m}{a})\,\Gamma(n+k+\frac{1}{2}+j\frac{m}{a})}\, C^{m}_{n-1+j\frac{m}{a}} \times \mathcal{Q}^{m}_{n-1+j\frac{m}{a}}(\cos\theta_o)\right] = 0$$

Letting p = n + 2k the method of summing can be changed as shown in Fig. 6. This is not a rearrangement as the terms in one row (or column) are in the same order as before.

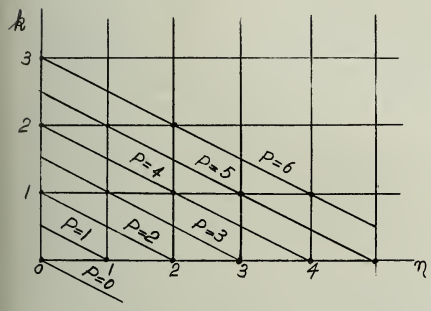

$$\sum_{n=0}^{\infty}\sum_{k=0}^{\infty} \text{ is equivalent to } \sum_{p=0}^{\infty}\sum_{(n)=0}^{p}$$

$$\sum_{n=1}^{\infty}\sum_{k=0}^{\infty} \text{ is equivalent to } \sum_{p=1}^{\infty}\sum_{(n)=1}^{p}$$

(n) = 0, 2, 4, 6, ... when p is even

(n) = 1, 3, 5, 7, ... when p is odd

FIGURE 6 THE SUMMATION METHOD

The coefficient of u^{ν} is always zero for p = 0, and for the other coefficients of u to be zero, for p = 1, 2, 3, ...

$$a\sum_{m=-\infty}^{\infty}\sum_{(n)=0}^{p}\frac{\left[n(n+1)+j\frac{m}{a}(2n-p)\right](j)^{p-n}}{\left(\frac{p-n}{2}\right)!\,(2)^{\frac{p+1}{2}+j\frac{m}{a}}\,\Gamma\left(\frac{p+n+3}{2}+j\frac{m}{a}\right)}\,C^{m}_{n+j\frac{m}{a}}\,\mathcal{C}^{m}_{n+j\frac{m}{a}}(\cos\theta_o)$$

$$+\sin\theta_o\sum_{m=-\infty}^{\infty}\sum_{(n)=1}^{p}\frac{(j)^{p-n}\,C^{m}_{n-1+j\frac{m}{a}}\,\mathcal{C}^{m}_{n-1+j\frac{m}{a}}(\cos\theta_o)}{\left(\frac{p-n}{2}\right)!\,(2)^{p-\frac{1}{2}+j\frac{m}{a}}\,\left(n-1+j\frac{m}{a}\right)\left(n+j\frac{m}{a}\right)\,\Gamma\left(\frac{p+n+1}{2}+j\frac{m}{a}\right)}=0$$

(B-6)

Substituting the values of $c'^{m}_{n+j\frac{m}{a}}$ and $c''^{m}_{n-1+j\frac{m}{a}}$ from Eq. 5-8 and 5-9 gives, for p = 1, 2, 3, ...

$$\frac{\sin^2\theta_o}{a^2}\sum_{\substack{m=-\infty\\ m\ \text{odd}}}^{\infty}\sum_{(n)=1}^{p}\left[\frac{(j)^{-n}\,(2)^{n}\,(n-\frac{1}{2}+j\frac{m}{a})\,\mathcal{P}^{m}_{n-1+j\frac{m}{a}}(\cos\theta_o)}{(\frac{p-n}{2})\,!\,(n-1+j\frac{m}{a})(n+j\frac{m}{a})\;\Gamma(\frac{p+n+1}{2}+j\frac{m}{a})}\sum_{k=o}^{\leq\frac{1}{2}(n-1)}\frac{\Gamma(n-k-\frac{1}{2}+j\frac{m}{a})}{k\,!\,(2)^{2k}}\,b_{n-2k-1}\right]$$

$$-\sum_{\substack{m=-\infty\\ m\ \text{odd}}}^{\infty}\sum_{(n)=o}^{p}\left[\frac{(j)^{-n}(2)^{n}(n+\frac{1}{2}+j\frac{m}{a})\left[n(n+1)+j\frac{m}{a}(2n-p)\right]}{(\frac{p-n}{2})\,!\,(n+1+j\frac{m}{a})(n+j\frac{m}{a})\Gamma(\frac{p+n+3}{2}+j\frac{m}{a})}\right.$$

$$\left.\times\sum_{k=o}^{\leq\frac{1}{2}(n+1)}\frac{\Gamma(n-k+\frac{1}{2}+j\frac{m}{a})}{k\,!\,(2)^{2k}}\left[n(n+1)+j\frac{m}{a}(n+2k+1)\right]\,b_{n-2k+1}\right]=0 \qquad \text{(B-7)}$$

Eq. B-7 then gives Eq. 5-12 when p is odd and Eq. 5-13 when p is even.

ANTENNA LABORATORY
TECHNICAL REPORTS AND MEMORANDA ISSUED

Contract AF33(616)-310

"Synthesis of Aperture Antennas," Technical Report No. 1, C.T.A. Johnk, October, 1954.

"A Synthesis Method for Broad-band Antenna Impedance Matching Networks," Technical Report No. 2, Nicholas Yaru, 1 February 1955.

"The Asymmetrically Excited Spherical Antenna," Technical Report No.3, Robert C. Hansen, 30 April 1955.

"Analysis of an Airborne Homing System," Technical Report No. 4, Paul E. Mayes, 1 June 1955, (CONFIDENTIAL).

"Coupling of Antenna Elements to a Circular Surface Waveguide," Technical Report No. 5, H.E. King and R.H. DuHamel, 30 June 1955.

"Input Impedance of a Spherical Ferrite Antenna with a Latitudinal Current," Technical Report No. 6, W.L. Weeks, 20 August 1955.

"Axially Excited Surface Wave Antennas," Technical Report No. 7, D.E. Royal, 10 October 1955.

"Homing Antennas for the F-86F Aircraft (450-2500 mc)," Technical Report No. 8, P.E. Mayes, R.F. Hyneman, and R.C. Becker, 20 February 1957. (CONFIDENTIAL)

"Ground Screen Pattern Range," Technical Memorandum No. 1, Roger R. Trapp, 10 July 1955.

Contract AF33(616)-3220

"Effective Permeability of Spheroidal Shells," Technical Report No. 9, E.J. Scott and R.H. Duhamel, 16 April 1956.

"An Analytical Study of Spaced Loop ADF Antenna Systems," Technical Report No. 10, D.G. Berry and J.B. Kreer, 10 May 1956.

"A Technique for Controlling the Radiation from Dielectric Rod Wavequides," Technical Report No. 11, J.W. Duncan and R.H. DuHamel, 15 July 1956.

"Directional Characteristics of a U-Shaped Slot Antenna," Technical Report No. 12, Richard C. Becker, 30 September 1956.

"Impedance of Ferrite Loop Antennas," Technical Report No. 13, V.H. Rumsey and W.L. Weeks, 15 October 1956.

"Closely Spaced Transverse Slots in Rectangular Waveguide," Technical Report No. 14, Richard F. Hyneman, 20 December 1956.

"Distributed Coupling to Surface Wave Antennas," Technical Report No. 15, Ralph Richard Hodges, Jr., 5 January 1957.

"The Characteristic Impedance of the Fin Antenna of Infinite Length," Technical Report No. 16, Robert L. Carrel, 15 January 1957.

"On the Estimation of Ferrite Loop Antenna Impedance," Technical Report No. 17, Walter L. Weeks, 10 April 1957.

"A Note Concerning a Mechanical Scanning System for a Flush Mounted Line Source Antenna," Technical Report No. 18, Walter L. Weeks, 20 April 1957.

"Broadband Logarithmically Periodic Antenna Structures," Technical Report No. 19, R.H. DuHamel and D.E. Isbell, 1 May 1957.

"Frequency Independent Antennas," Technical Report No. 20, V.H. Rumsey, 25 October 1957.

"The Equiangular Spiral Antenna," Technical Report No. 21, J.D. Dyson, 15 September 1957.

"Experimental Investigation of the Conical Spiral Antenna," Technical Report No. 22, R.L. Carrel, 25 May 1957.

"Coupling Between a Parallel Plate Waveguide and a Surface Waveguide," Technical Report No. 23, E.J. Scott, 10 August 1957.

"Launching Efficiency of Wires and Slots for a Dielectric Rod Waveguide," Technical Report No. 24, J.W. Duncan and R.H. DuHamel, August 1957.

"The Characteristic Impedance of an Infinite Biconical Antenna of Arbitrary Cross Section," Technical Report No. 25, Robert L. Carrel, August 1957.

"Cavity-Backed Slot Antennas," Technical Report No. 26, R.J. Tector, 30 October 1957.

"Coupled Waveguide Excitation of Traveling Wave Slot Antennas," Technical Report No. 27, W.L. Weeks, 1 December 1957.

"Phase Velocities in Rectangular Waveguide Partially Filled with Dielectric," Technical Report No. 28, W.L. Weeks, 20 December 1957.

"Measuring the Capacitance per Unit Length of Biconical Structures of Arbitrary Cross Section," Technical Report No. 29, J.D. Dyson, 10 January 1958.

"Non-Planar Logarithmically Periodic Antenna Structure," Technical Report No. 30, D.W. Isbell, 20 February 1958.

"Electromagnetic Fields in Rectangular Slots," Technical Report No. 31, N.J. Kuhn and P.E. Mast, 10 March 1958.

"The Efficiency of Excitation of a Surface Wave on a Dielectric Cylinder," Technical Report No. 32, J.W. Duncan, 25 May 1958.

"A Unidirectional Equiangular Spiral Antenna," Technical Report No. 33, J.D. Dyson, 10 July 1958.

"Dielectric Coated Spheroidal Radiators," Technical Report No. 34, W.L. Weeks, 12 September 1958.

"A Theoretical Study of the Equiangular Spiral Antenna," Technical Report No. 35, P.E. Mast, 12 September 1958.

DISTRIBUTION LIST

One copy each unless otherwise indicated

Armed Services Technical Information
Agency
Arlington Hall Station
Arlington 12, Virginia 3 & 1 repro

Commander
Wright Air Development Center
Wright-Patterson Air Force Base, Ohio
Attn: WCLRS-6, Mr. W.J. Portune 3 copies

Commander
Wright Air Development Center
Wright-Patterson Air Force Base, Ohio
Attn: WCLNQ-4, Mr. N. Draganjac

Commander
Wright Air Development Center
Wright-Patterson Air Force Base, Ohio
Attn: WCOSI, Library

Director
Evans Signal Laboratory
Belmar, New Jersey
Attn: Technical Document Center

Commander
U.S. Naval Air Test Center
Attn: ET-315
Antenna Section
Patuxent River, Maryland

Chief
Bureau of Ordnance
Department of the Navy
Attn: Mr. C.H. Jackson, Code Re 9a
Washington 25, D.C.

Commander
Hq. A.F. Cambridge Research Center
Air Research and Development Command
Laurence G. Hanscom Field
Bedford, Massachusetts
Attn: CRRD, R.E. Hiatt

Commander
Air Force Missile Test Center
Patrick Air Force Base, Florida
Attn: Technical Library

Director
Ballistics Research Lab.
Aberdeen Proving Ground, Maryland
Attn: Ballistics Measurement Lab.

Office of the Chief Signal Officer
Attn: SIGNET-5
Eng. & Technical Division
Washington 25, D.C.

Commander
Rome Air Development Center
ATTN: RCERA-1 D. Mather
Griffiss Air Force Base
Rome, N.Y.

Airborne Instruments Lab., Inc.
Attn: Dr. E.G. Fubini
Antenna Section
160 Old Country Road
Mineola, New York
M/F Contract AF33(616)-2143

Andrew Alford Consulting Engrs.
Attn: Dr. A. Alford
299 Atlantic Ave.
Boston 10, Massachusetts
M/F Contract AF33(038)-23700

Bell Aircraft Corporation
Attn: Mr. J.D. Shantz
Buffalo 5, New York
M/F Contract W-33(038)-14169

Chief
Bureau of Ships
Department of the Navy
Attn: Code 838D, L.E. Shoemaker
Washington 25, D.C.

DISTRIBUTION LIST (CONT.)

One copy each unless other wise indicated

Director
Naval Research Laboratory
Attn: Dr. J.I. Bohnert
Anacostia
Washington 25, D.C.

National Bureau of Standards
Department of Commerce
Attn: Dr. A.G. McNish
Washington 25, D.C.

Director
U.S. Navy Electronics Lab.
Point Loma
San Diego 52, California

Commander
USA White Sands Signal Agency
White Sands Proving Command
Attn: SIGWS-FC-02
White Sands, N.M.

Consolidated Vultee Aircraft Corp.
Fort Worth Division
Attn: C.R. Curnutt
Fort Worth, Texas
M/F Contract AF33(038)-21117

Dorne & Margolin
29 New York Ave.
Westbury
Long Island, New York
M/F Contract AF33(616)-2037

Douglas Aircraft Company, Inc.
Long Beach Plant
Attn: J.C. Buckwalter
Long Beach 1, California
M/F Contract AF33(600)-25669

Boeing Airplane Company
Attn: F. Bushman
7755 Marginal Way
Seattle, Washington
M/F Contract AF33(038)-31096

Chance-Vought Aircraft Division
United Aircraft Corporation
Attn: Mr. F.N. Kickerman
Thru: BuAer Representative
Dallas, Texas

Consolidated-Vultee Aircraft Corp
Attn: Mr. R.E. Honer
P.O. Box 1950
San Diego 12, California
M/F Contract AF33(600)-26530

Grumman Aircraft Engineering Corp
Attn: J.S. Erickson
Asst. Chief, Avionics Dept.
Bethpage
Long Island, New York
M/F Contract NOa(s) 51-118

Hallicrafters Corporation
Attn: Norman Foot
440 W. 5th Avenue
Chicago, Illinois
M/F Contract AF33(600)-26117

Hoffman Laboratories Division
Attn: J.D. Funderburg,
Counter Measures Section
Los Angeles, California
M/F Contract AF33(604)-17231

Hughes Aircraft Corporation
Division of Hughes Tool Company
Attn: D. Adcock
Florence Avenue at Teale
Culver City, California
M/F Contract AF33(600)-27615

Illinois, University of
Head, Department of Elec. Eng.
Attn: Dr. E.C. Jordan
Urbana, Illinois

DISTRIBUTION LIST (CONT.)

One copy each unless otherwise indicated

Ohio State Univ. Research Foundation
Attn: Dr. T.C. Tice
310 Administration Bldg.
Ohio State University
Columbus 10, Ohio
M/F Contract AF33(616)-3353

Air Force Development Field
Representative
Attn: Capt. Carl B. Ausfahl
Code 1010
Naval Research Laboratory
Washington 25, D.C.

Chief of Naval Research
Department of the Navy
Attn: Mr. Harry Harrison
Code 427, Room 2604
Bldg. T-3
Washington 25, D.C.

Beech Aircraft Corporation
Attn: Chief Engineer
6600 E. Central Avenue
Wichita 1, Kansas
M/F Contract AF33(600)-20910

Land-Air, Incorporated
Cheyenne Division
Attn: Mr. R.J. Klessig
Chief Engineer
Cheyenne, Wyoming
M/F Contract AF33(600)-22964

Director, National Security Agency
RADE 1GM, Attn: Lt. Manning
Washington 25, D.C.

Melpar, Incorporated
3000 Arlington Blvd.
Falls Church, Virginia
Attn: K.S. Kelleher

Naval Air Missile Test Center
Point Mugu, California
Attn: Antenna Section

Fairchild Engine & Airplane Corp
Fairchild Airplane Division
Attn: L. Fahnestock
Hagerstown, Maryland
M/F Contract AF33(038)-18499

Federal Telecommunications Lab.
Attn: Mr. A. Kandoian
500 Washington Avenue
Nutley 10, New Jersey
M/F Contract AF33(616)-3071

Ryan Aeronautical Company
Lindbergh Drive
San Diego 12, California
M/F Contract W-33(038)-ac-21370

Republic Aviation Corporation
Attn: Mr. Thatcher
Hicksville, Long Island, New York
M/F Contract AF18(600)-1602

General Electric Co.
French Road
Utica, New York
Attn: Mr. Grimm, LMEED
M/F Contract AF33(600)-30632

D.E. Royal
The Ramo-Wooldridge Corp
Communications Division
P.O. Box 45444
Airport Station
Los Angeles 45, California

Motorola, Inc.
Defense Systems Lab.
Attn: Mr. A.W. Boekelheide
3102 N. 56th Street
Phoenix, Arizona
M/F Contract NOa(s)-53-492-c

Stanford Research Institute
Southern California Laboratories
Attn: Document Librarian
820 Mission Street
South Pasadena, California
Contract AF19(604)-1296

DISTRIBUTION LIST (CONT.)

One copy each unless otherwise indicated

Johns Hopkins University
Radiation Laboratory
Attn: Librarian
1315 St. Paul Street
Baltimore 2, Maryland
M/F Contract AF33(616)-68

Glen L. Martin Company
Baltimore 3, Maryland
M/F Contract AF33(600)-21703

McDonnell Aircraft Corporation
Attn: Engineering Library
Lambert Municipal Airport
St. Louis 21, Missouri
M/F Contract AF33(600)-8743

Michigan, University of
Aeronautical Research Center
Attn: Dr. L. Cutrona
Willow Run Airport
Ypsilanti, Michigan
M/F Contract AF33(038)-21573

Massachusetts Institute of Tech.
Attn: Prof. H.J. Zimmermann
Research Lab. of Electronics
Cambridge, Massachusetts
M/F Contract AF33(616)-2107

North American Aviation, Inc.
Los Angeles International Airport
Attn: Mr. Dave Mason
Engineering Data Section
Los Angeles 45, California
M/F Contract AF33(038)-18319

Northrop Aircraft, Incorporated
Attn: Northrop Library
Dept. 2135
Hawthorne, California
M/F Contract AF33(600)-22313

Radioplane Company
Van Nuys, California
M/F Contract AF33(600)-23893

Lockheed Aircraft Corporation
Attn: C.L. Johnson
P.O. Box 55
Burbank, California
M/F NOa(s)-52-763

Raytheon Manufacturing Company
Attn: Robert Borts
Wayland Laboratory, Wayland, Mass.

Republic Aviation Corporation
Attn: Engineering Library
Farmingdale
Long Island, New York
M/F Contract AF33(038)-14810

Sperry Gyroscope Company
Attn: Mr. B. Berkowitz
Great Neck
Long Island, New York
M/F Contract AF33(038)-14524

Temco Aircraft Corp
Attn: Mr. George Cramer
Garland, Texas
Contract AF33(600)-21714

Farnsworth Electronics Co.
Attn: George Giffin
Ft. Wayne, Indiana
M/F Contract AF33(600)-25523

North American Aviation, Inc.
4300 E. Fifth Ave.
Columbus, Ohio
Attn: Mr. James D. Leonard
Contract NOa(s)-54-323

Westinghouse Electric Corporation
Air Arm Division
Attn: Mr. P.D. Newhouser
Development Engineering
Friendship Airport, Maryland
Contract AF33(600)-27852

DISTRIBUTION LIST (CONT.)

One copy each unless otherwise indicated

Prof. J.R. Whinnery
Dept. of Electrical Engineering
University of California
Berkeley, California

Professor Morris Kline
Mathematics Research Group
New York University
45 Astor Place
New York, N.Y.

Prof. A.A. Oliner
Microwave Research Institute
Polytechnic Institute of Brooklyn
55 Johnson Street - Third Floor
Brooklyn, New York

Dr. C.H. Papas
Dept. of Electrical Engineering
California Institute of Technology
Pasadena, California

Electronics Research Laboratory
Stanford University
Stanford, California
Attn: Dr. F.E. Terman

Radio Corporation of America
R.C.A. Laboratories Division
Princeton, New Jersey

Electrical Engineering Res. Lab.
University of Texas
Box 8026, University Station
Austin, Texas

Dr. Robert Hansen
8356 Chase Avenue
Los Angeles 45, California

Technical Library
Bell Telephone Laboratories
463 West St.
New York 14, N.Y.

Dr. R.E. Beam
Microwave Laboratory
Northwestern University
Evanston, Illinois

Department of Electrical Engineering
Cornell University
Ithaca, New York
Attn: Dr. H.G. Booker

Applied Physics Laboratory
Johns Hopkins University
8621 Georgia Avenue
Silver Spring, Maryland

Exchange and Gift Division
The Library of Congress
Washington 25, D.C.

Ennis Kuhlman
c/o McDonnell Aircraft
P.O. Box 516
Lambert Municipal Airport
St. Louis 21, Mo.

Mr. Roger Battie
Supervisor, Technical Liaison
Sylvania Electric Products, Inc.
Electronic Systems Division
P.O. Box 188
Mountain View, California

Physical Science Lab.
New Mexico College of A and MA
State College, New Mexico
Attn: R. Dressel

Technical Reports Collection
303 A Pierce Hall
Harvard University
Cambridge 38, Mass.
Attn: Mrs. E.L. Hufschmidt, Librarian

Dr. R.H. DuHamel
Collins Radio Company
Cedar Rapids, Iowa

DISTRIBUTION LIST (CONT.)

One copy each unless otherwise indicated

Dr. R.F. Hyneman
5116 Marburn Avenue
Los Angeles 45, California

Director
Air University Library
Attn: AUL-8489
Maxwell AFB, Alabama

Stanford Research Institute
Documents Center
Menlo Park, California
Attn: Mary Lou Fields, Acquisitions

Dr. Harry Letaw, Jr.
Research Division
Raytheon Manufacturing Co.
Waltham 54, Massachusetts

Canoga Corporation
5955 Sepulveda Blvd.
P.O. Box 550
Van Nuys, California
M/F Contract AF08(603)-4327

Radiation, Inc.
Technical Library Section
Attn: Antenna Department
Melbourne, Florida
M/F Contract AF33(600)-36705

Westinghouse Electric Corporation
Attn: Electronics Division
Friendship International Airport
Box 746
Baltimore 3, Maryland
M/F Contract AF33(600)-27852

North American Aviation, Inc.
Aerophysics Laboratory
Attn: Dr. J.A. Marsh
12214 Lakewood Blvd
Downey, California
M/F Contract AF33(038)-18319

Chief
Bureau of Aeronautics
Department of the Navy
Attn: Aer-EL-931